S50110-L8

(IN THE PART NUMBER THE 8 INDICATES) CHAIN SIZE / CHAIN LINK SIZE (SEE TENSIONER REQUIREMENTS)		
PART NUMBER	CHAIN SIZE	CONNECTOR LINK SIZE
CSP-L8-XXXXXX-XXXX	8 MM	10 MM

(PART NUMBER 1ST THRU 4TH XXXX'S) BELT WIDTH / NUMBER OF ELEMENTS		
PART NO.	DIM "A"	# ELEMENTS
CSP-L8-8442XX-XXXX	82.63	42
CSP-L8-9648XX-XXXX	94.44	48

(PART NUMBER 5TH X) BLADE TYPE	
PART NO.	APPLICATION
CSP-L8-XXXX1X-XXXX	STANDARD VERSION, SUITABLE FOR LESS ABRASIVE MATERIALS AND LOW BELT SPEEDS, ALLOWED FOR MECHANICAL SPLICES
CSP-L8-XXXX2X-XXXX	MODERATE VERSION, SUITABLE FOR ABRASIVE MATERIALS AND MEDIUM BELT SPEEDS, ALLOWED FOR MECHANICAL SPLICES
CSP-L8-XXXX3X-XXXX	SEVERE VERSION, SUITABLE FOR HIGHLY ABRASIVE MATERIALS AND HIGH BELT SPEEDS, NOT ALLOWED FOR MECHANICAL SPLICES
CSP-L8-XXXX4X-XXXX	EXTREME VERSION, SUITABLE FOR EXTREMELY ABRASIVE MATERIALS AND HIGHEST BELT SPEEDS, NOT ALLOWED FOR MECHANICAL SPLICES
3 CSP-L8-XXXX5C-XXXX	STANDARD/MODERATE VERSION, SUITABLE FOR ABRASIVE MATERIALS AND LOW/MEDIUM BELT SPEEDS, ALLOWED FOR MECHANICAL SPLICES, HAS CHEMICAL RESISTANCE

(PART NUMBER 6TH X) TYPE OF SWAGE SLEEVES	
PART NO.	TYPE OF SWAGE SLEEVES
CSP-L8-XXXXX-XXXX	ALUMINUM SWAGE SLEEVES
CSP-L8-XXXXXC-XXXX	COPPER SWAGE SLEEVES

ITEM	QTY.	DESCRIPTION	PART NUMBER
1	1	MARTIN CLEANSCRAPE CLEANER ASSEMBLY	SEE CHARTS

(PART NUMBER LAST FOUR XXXX'S) TENSIONER / INSTALLATION KIT	
PART NO.	TENSIONER SIZE / MOUNT BRACKET
CSP-L8-XXXXXX-T66	6.6 KN STEEL TENSIONER FOR 8 MM CHAIN
CSP-L8-XXXXXX-T66C	6.6 KN STAINLESS STEEL TENSIONER FOR 8 MM CHAIN

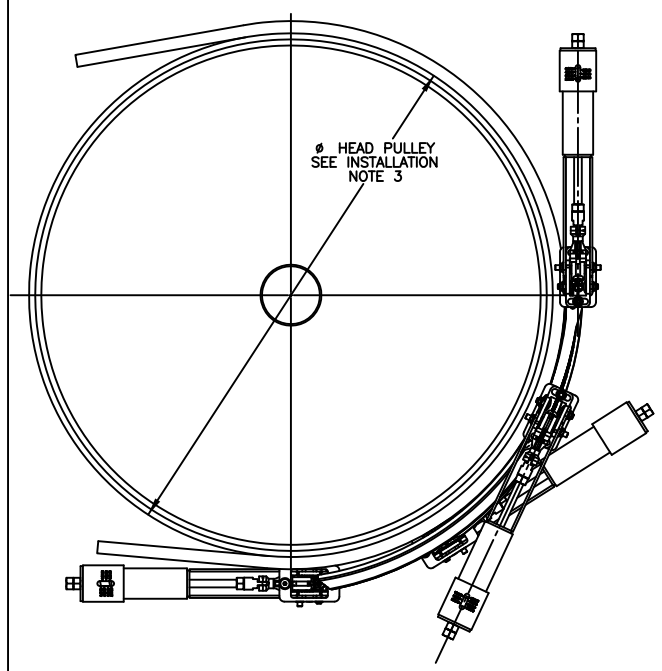

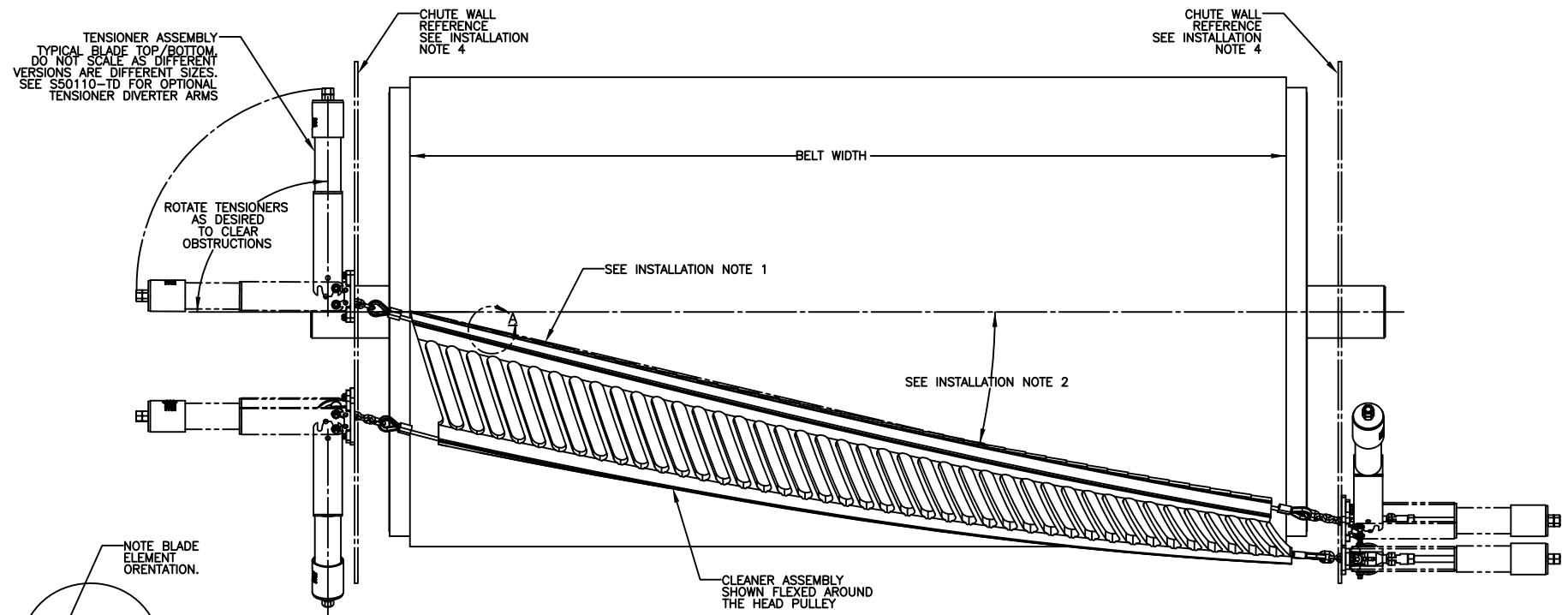

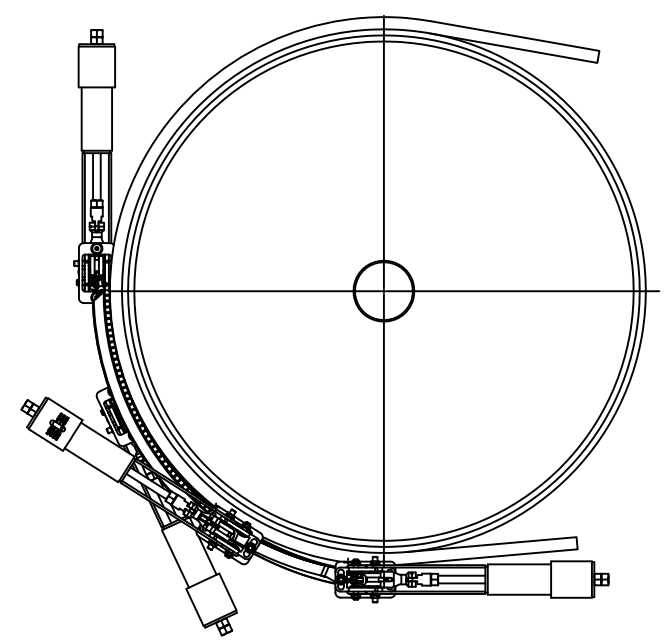

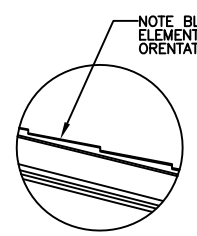

DETAIL A
SCALE 3 : 8

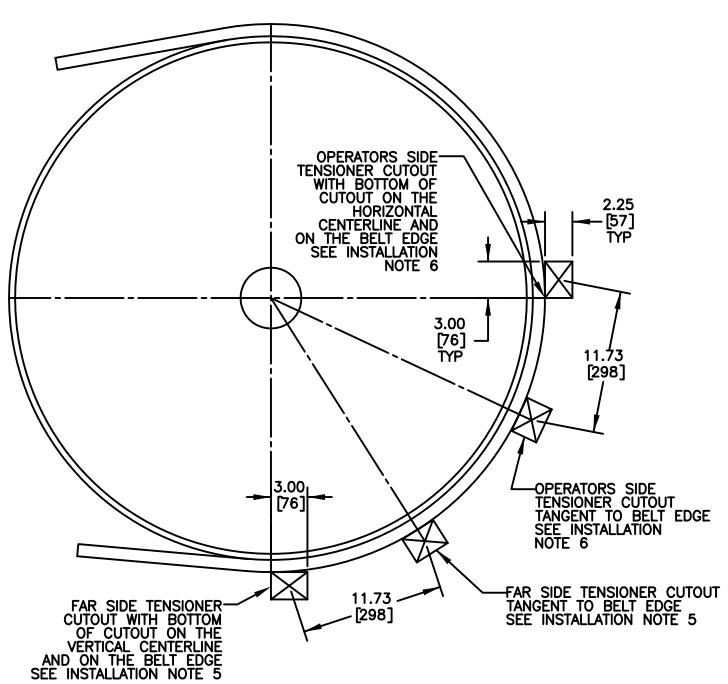

TENSIONER CHUTE CUTOUT LOCATIONS
SCALE 1:8

INSTALLATION NOTES:
1) BLADE CARBIDE SCRAPERS ARE MOLDED INTO THE RUBBER BODY AT AN ANGLE CREATING A SERRATED CLEANING EDGE. CLEANER MUST BE MOUNTED AT AN ANGLE AS SHOWN. CLEANER MUST NOT LIE IN THE MATERIAL PATH.
2) THE IDEAL INSTALLATION ANGLE IS BETWEEN 14° AND 17°. ANGLES FROM 10° TO 22° ARE ACCEPTABLE.
3) BELT WIDTH MUST NOT EXCEED A RATIO OF 3:1 TO THE HEAD PULLEY DIAMETER. HEAD PULLEY RANGE IS 36" MIN. TO 50" MAX.
4) CHUTE WALLS MUST BE STRONG ENOUGH TO NOT FLEX WHEN THE CLEANER IS TENSIONED. ADDITIONAL CHUTE WALL STRUCTURE MAY BE REQUIRED TO PREVENT CHUTE WALL FROM FLEXING.
5) ON THE FAR SIDE OF THE CHUTE WALL MARK THE LOCATION OF THE TENSIONER CUTOUTS. SEE THE CUTOUT DETAIL. WELD THE TENSIONER MOUNT BRACKETS TO THE CHUTE WALL POSITIONED OVER THE CUTOUTS. BOLT THE TENSIONERS TO THE TENSIONER MOUNT BRACKETS. LEAVE THE ADJUSTMENT BOLTS LOOSE AT THIS TIME.
6) ON THE OPERATORS SIDE OF THE CHUTE WALL MARK THE LOCATION OF THE TENSIONER CUTOUTS. SEE THE CUTOUT DETAIL. WELD THE TENSIONER MOUNT BRACKETS TO THE CHUTE WALL POSITIONED OVER THE CUTOUTS. BOLT THE TENSIONERS TO THE TENSIONER MOUNT BRACKETS. LEAVE THE ADJUSTMENT BOLTS LOOSE AT THIS TIME.
7) ASSEMBLE THE CHAINS ON THE BLADE TO THE TENSIONERS BY HOLDING THE CLEANER TO THE HEAD PULLEY AND ROUTING THE CHAINS THROUGH THE CHUTE WALL. MAKE SURE THE TENSIONER ADJUSTMENT NUTS ARE AT THE END OF THE TENSIONER THREADED ROD. TIGHTEN THE TENSIONER ADJUSTMENT NUTS UNTIL THE CLEANER IS HELD FIRMLY AGAINST THE HEAD PULLEY. ADJUST THE TENSIONER BRACKETS SO THE OUTER TWO ELEMENTS ON EACH SIDE OF THE CLEANER ARE APPROXIMATELY 1/8" AWAY FROM THE BELT. TIGHTEN ALL BOLTS.
8) TENSION THE CLEANER PER THE RECOMMENDED TENSION IN THE MANUAL.

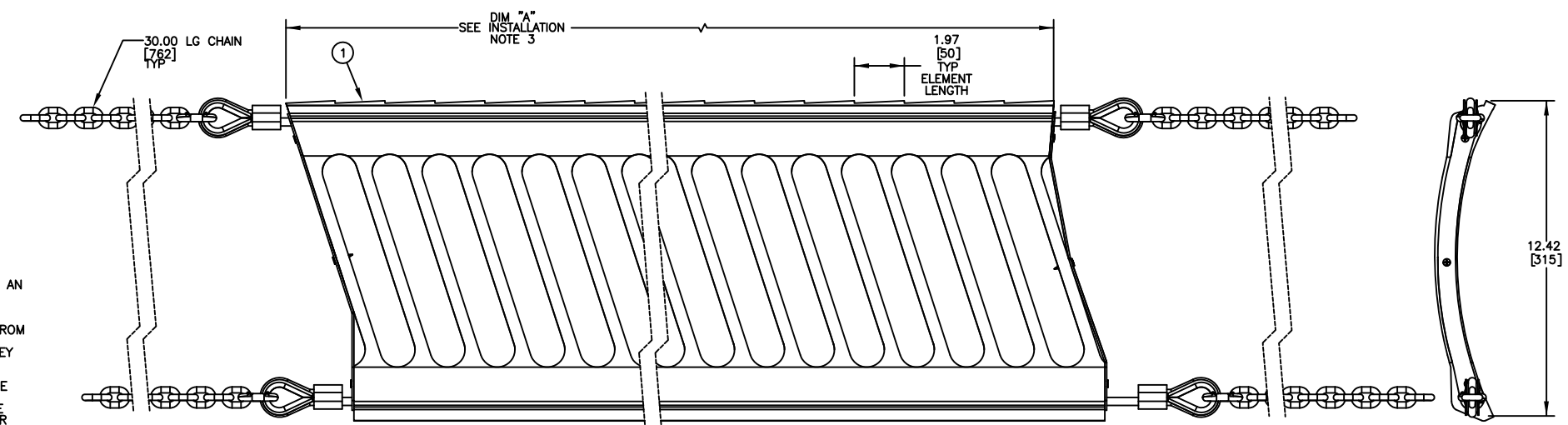

BLADE DETAIL
SCALE 5:16

NOTES:
1) ALL DIMENSIONS ARE GIVEN IN INCHES [MM].
2) ALL DIMENSIONS ARE FOR REFERENCE ONLY.
3) IN THE BLADE ASSEMBLY PART NUMBER:
THE 8 INDICATES CHAIN SIZE.
6.6KN TENSIONERS REQUIRE 8MM CHAIN.
THE NEXT XX INDICATES BLADE WIDTH
THE NEXT XX INDICATES NUMBER OF ELEMENTS IN BLADE
THE NEXT X INDICATES BLADE CARBIDE TYPE.
THE NEXT X INDICATES IF COPPER SWAGE SLEEVES ARE REQUIRED.
BLANK = ALUMINUM SWAGE SLEEVES & GALVANIZED THIMBLES
C = COPPER SWAGE SLEEVES & STAINLESS STEEL THIMBLES
ALL CSP-L-TU05 BLADE ASSEMBLIES ARE ONLY AVAILABLE WITH COPPER SWAGE SLEEVES & STAINLESS STEEL THIMBLES
THE NEXT XXX INDICATES IF INSTALLATION KIT IS INCLUDED.
T66 = 6.6 KN STEEL SPRING TENSIONER
T66C = STAINLESS STEEL 6.6 KN SPRING TENSIONER

NO.	DESCRIPTION	ECN	DATE	BY
A	CHGD P/N FROM CSP-L8-XXXX5X-XXXX TO CSP-L8-XXXX5C-XXXX / UPDATED P/N NOTE	14841	04/10/17	JAH

SOLIDWORKS REVISION

© Copyright 2017 Martin Engineering. All rights reserved. Covered by U.S. and foreign patents pending and issued. ® and ™ indicate trademarks of Martin Engineering.

MARTIN ENGINEERING-USA
NEPONSET, IL USA

TITLE: CLEANSCRAPE LARGE CLEANER ASM'S WITH 6.6 KN TENSIONERS

SALES DRAWING

MD894 S50110-L8

DRAWN RND DATE 01/25/17
CHECKED
ENG. DATE 01/26/17
APPROVED DATE 01/27/17
SCALE 1:8