PART NO.	DIM "A" BLADE LENGTH	DIM "B" MNFRM LENGTH
PVIS-18XX12XXXX	12.00 [305]	48.00 [1219]
PVIS-18XX16XXXX	16.00 [406]	48.00 [1219]
PVIS-24XX18XXXX	18.00 [457]	54.00 [1372]
PVIS-24XX22XXXX	22.00 [559]	54.00 [1372]
PVIS-30XX24XXXX	24.00 [610]	60.00 [1524]
PVIS-30XX28XXXX	28.00 [711]	60.00 [1524]
PVIS-36XX30XXXX	30.00 [762]	66.00 [1676]
PVIS-36XX34XXXX	34.00 [864]	66.00 [1676]
PVIS-42XX36XXXX	36.00 [914]	72.00 [1829]
PVIS-42XX40XXXX	40.00 [1016]	72.00 [1829]
PVIS-48XX42XXXX	42.00 [1067]	78.00 [1981]
PVIS-48XX46XXXX	46.00 [1168]	78.00 [1981]
PVIS-54XX48XXXX	48.00 [1219]	84.00 [2134]
PVIS-54XX52XXXX	52.00 [1321]	84.00 [2134]
PVIS-60XX54XXXX	54.00 [1372]	90.00 [2286]
PVIS-60XX58XXXX	58.00 [1473]	90.00 [2286]
PVIS-66XX60XXXX	60.00 [1524]	96.00 [2438]
PVIS-72XX66XXXX	66.00 [1676]	102.00 [2591]
PVIS-72XX70XXXX	70.00 [1778]	102.00 [2591]

ASSEMBLY PART NO.	BLADE COLOR
PVIS-XXXXXXBRXX	BROWN
PVIS-XXXXXXCLXX	TAN
PVIS-XXXXXXGRXX	GREEN
PVIS-XXXXXXNBXX	NAVY BLUE
PVIS-XXXXXXORXX	ORANGE

ITEM	QTY.	DESCRIPTION	PART NUMBER
1	1	MARTIN ®PV PERFORMANCE DUTY CLEANER	PVIS-XXXXXXXXXX
2	1	MARTIN ®SPRING CABLE TENS ASM	37944
3	1	MARTIN ®LOW PROFILE STL DOOR 9X12	CYA-0912
4	1	CABLE TENSIONER ADAPTER MOUNT KIT	38100

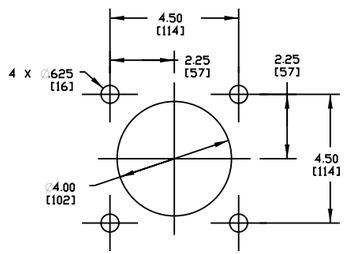

TENSIONER CHUTEWALL CUTOUT DETAIL
(TYPICAL BOTH SIDES)
SCALE 3/8

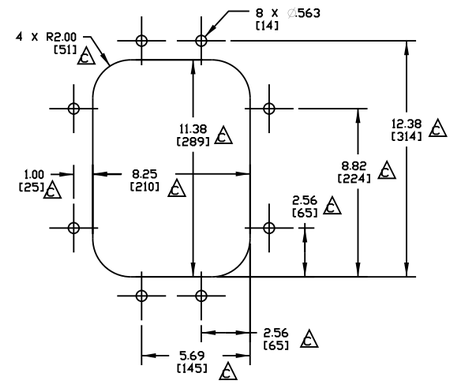

DOOR CUTOUT DETAIL
SCALE 1/4

NOTES:
1) ALL DIMENSIONS ARE GIVEN IN INCHES [MM] AND ARE FOR REFERENCE ONLY.
2) WHERE EXTREME OR UNUSUAL CONDITIONS EXIST, OR SPECIAL MAINFRAME LENGTHS ARE REQUIRED, CONTACT MARTIN.
3) THE PVIS PRECLEANER BLADES ARE DESIGNED TO REMOVE HEAVY CARRYBACK ONLY. DO NOT OVERTENSION.
4) BLADE COVERAGE WILL BE LESS THAN BELT WIDTH DUE TO POSSIBLE MISTRACKING OR DAMAGED EDGES OF BELT.
5) CLEANER CAN BE LOCATED ANYWHERE ALONG THE 2.75 [70] ARC AS LONG AS THE BLADE TIP IS BELOW THE HORZONTIAL CENTERLINE. THE CLEANER IS SHOWN IN THE RECOMMENDED POSITION.
6) TENSIONER ASSEMBLY MAY BE BOLTED OR WELDED IN PLACE MARTIN ENGINEERING RECOMMENDS BOLTING WHEN APPLICABLE FOR EASIER MAINTENANCE AND ACCESSIBILITY.
7) REFER TO OPERATOR'S MANUAL'S M3734 & M3735, FOR INSTALLATION AND TENSIONING INSTRUCTIONS.
8) IN THE P/N:
THE PVIS INDICATES A STANDARD DUTY PRE-CLEANER.
THE FIRST TWO XX'S INDICATE BELT WIDTH.
THE NEXT TWO XX'S INDICATE THE BLADE TYPE.
11 = SOLID BLADE
10 = SEGMENTED BLADE
THE NEXT TWO XX'S INDICATE THE BLADE COVERAGE:
00 = NO BLADE
THE NEXT TWO XX'S INDICATE THE BLADE URETHANE TYPE:
00 = NO BLADE
BR = BROWN BLADE
CL = TAN BLADE
GR = GREEN BLADE
NB = NAVY BLUE BLADE
OR = ORANGE BLADE
THE NEXT X INDICATES THE MAINFRAME TYPE:
0 = NO MAINFRAME
P = STANDARD PAINTED MAINFRAME
THE LAST X INDICATES THE ACCESSORY OPTIONS:
0 = NO OPTIONS
C = WITH SPRING CABLE TENSIONER

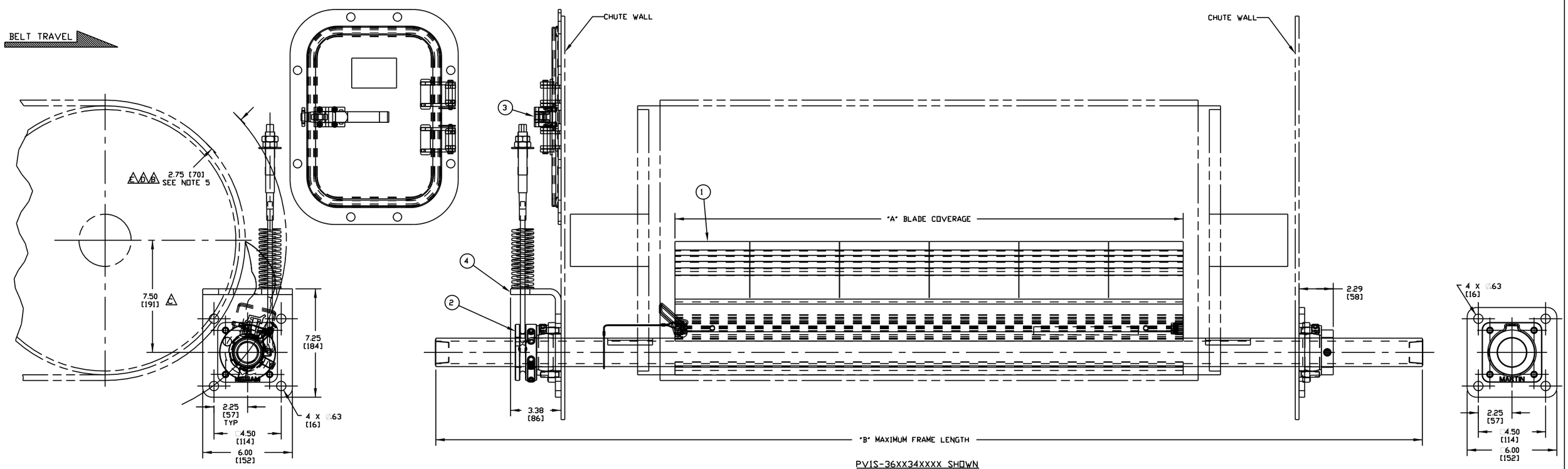

PVIS-36XX34XXXX SHOWN

NO.	DESCRIPTION	ECN	DATE	BY
E	CHGD DIM FROM 2.75-3.00 TO 2.75 DN ARC AND IN NOTE / ADDED P/N PVIS-60XX54XXXX, -60XX58XXXX, -66XX60XXXX, -72XX66XXXX & -72XX70XXXX TO CHART	14530	04/08/16	JAH
D	CHGD DIM FROM 3.00 TO 2.75-3.00 DN ARC AND IN NOTE	14166	03/05/15	JAH
C	CHGD P/N FROM 34955-0912 TO CYA-0912 IN BOM/CHGD DIM FROM 7.00 TO 7.50, 4 X R1.81 TO 4 X R2.00, .75 TO 1.00, 2.81 TO 2.56, 5.94 TO 5.69, 8.75 TO 8.25, 11.00 TO 11.38, 2.82 TO 2.56, 3.07 TO 8.82 & 12.63 TO 12.38	12568	02/10/09	MJB
B	CHGD DIM FROM 2.75 TO 3.00 DN ARC AND IN NOTES	----	04/22/08	MJB
A	ADDED P/N PVIS-XXXXXXBRXX & PVIS-XXXXXXORXX TO THE CHART/ADDED BROWN & GREEN BLADES TO NOTE (PR10854)	----	08/24/07	MJB

REVISION

©Copyright 2016 Martin Engineering. All rights reserved. Covered by U.S. and foreign patents pending and issued. ® and ™ indicate trademarks of Martin Engineering.

MARTIN ENGINEERING
NEPONSET, IL USA

TITLE: MARTIN ®PV PERFORMANCE DUTY WITH ADAPTER MOUNT KIT TO CONVERT FROM INTERNAL SPRING TO CABLE TENSIONER

SALES DRAWING

PR10680

S50047

DRAWN	JAP
DATE	02/19/07
CHECKED	
ENG.	JAP
DATE	02/19/07
APPROVED	DM
DATE	02/19/07
SCALE	5/16