PART NUMBER	DIM "A"	DIM "B"	P/N ITEM 1	P/N ITEM 2	P/N ITEM 3	QTY. ITEM 6	QTY. ITEM 7	QTY. ITEM 8	WEIGHT KG [LBS.] W/O TENS
UBMS24SFXXXX	609.6 [24.00]	2619.3 [103.12]	UBMS24SFX	UBBPS24X	UBFPS24X	3	14	7	38.4 [84.7]
UBMS30S6XXXX	609.6 [24.00]	2619.3 [103.12]	UBMS30S6X	UBBPS24X	UBFPS24X	3	14	7	38.4 [84.7]
UBMS30SFXXXX	762.0 [30.00]	2771.7 [109.12]	UBMS30SFX	UBBPS30X	UBFPS30X	3	14	7	42.7 [94.2]
UBMS36S6XXXX	762.0 [30.00]	2771.7 [109.12]	UBMS36S6X	UBBPS30X	UBFPS30X	3	14	7	42.7 [94.2]
UBMS36SFXXXX	914.4 [36.00]	2924.1 [115.12]	UBMS36SFX	UBBPS36X	UBFPS36X	5	18	9	46.9 [103.4]
UBMS42S6XXXX	914.4 [36.00]	2924.1 [115.12]	UBMS42S6X	UBBPS36X	UBFPS36X	5	18	9	46.9 [103.4]
UBMS42SFXXXX	1066.8 [42.00]	3076.5 [121.12]	UBMS42SFX	UBBPS42X	UBFPS42X	5	18	9	51.0 [112.5]
UBMS48S6XXXX	1066.8 [42.00]	3076.5 [121.12]	UBMS48S6X	UBBPS42X	UBFPS42X	5	18	9	51.0 [112.5]
UBMS48SFXXXX	1219.2 [48.00]	3228.9 [127.12]	UBMS48SFX	UBBPS48X	UBFPS48X	7	22	11	55.2 [121.7]
UBMS54S6XXXX	1219.2 [48.00]	3228.9 [127.12]	UBMS54S6X	UBBPS48X	UBFPS48X	7	22	11	55.2 [121.7]
UBMS54SFXXXX	1371.6 [54.00]	3381.3 [133.12]	UBMS54SFX	UBBPS54X	UBFPS54X	7	22	11	59.3 [130.8]
UBMS60S6XXXX	1371.6 [54.00]	3381.3 [133.12]	UBMS60S6X	UBBPS54X	UBFPS54X	7	22	11	59.3 [130.8]
UBMS60SFXXXX	1524.0 [60.00]	3533.7 [139.12]	UBMS60SFX	UBBPS60X	UBFPS60X	9	26	13	63.4 [139.8]
UBMS66S6XXXX	1524.0 [60.00]	3533.7 [139.12]	UBMS66S6X	UBBPS60X	UBFPS60X	9	26	13	63.4 [139.8]
UBMS72SFXXXX	1828.8 [72.00]	3838.5 [151.12]	UBMS72SFX	UBBPS72X	UBFPS72X	11	30	15	71.7 [158.1]

BLADE COLOR CHART		
PART NUMBER	P/N ITEM 1	COLOR
UBMSXXSXOXXX	UBMSXXSXO	ORANGE
UBMSXXSXBXXX	UBMSXXSXB	BROWN
UBMSXXSXGXXX	UBMSXXSXG	GREEN

	ITEM	QTY.	DESCRIPTION	PART NUMBER
	1	1	BLADE WITH STEEL INSERT	SEE CHART
	2	1	BACK PLATE	SEE CHART
	3	1	FRONT PLATE	SEE CHART
	4	2	FRAME END WELDMENT	SEE CHART
	5	4	SCREW HHC 1/2-13NC X 4-1/2	SEE CHART
	6	S/C	SCREW HHC 1/2-13NC X 3-1/2	SEE CHART
	7	S/C	WASHER FLAT 1/2 WIDE	SEE CHART
	8	S/C	NUT HEX ELASTIC LOCK 1/2-13NC	SEE CHART
	9	4	PIN SLOTTED SPRING 1/4 X 5/8	SEE CHART
NS	10	1	TENSIONER ASSEMBLY	SEE TENS CHART
NS	11	1	COVER DOOR ASSEMBLY	SEE DOOR CHART
NS	12	1	MANUAL OPERATORS	M4207
	13	2	PLUG FOR 2.50 SQ TUBE	34896-02
	14	2	LABEL MARTIN PRODUCT	38048

S/C = SEE CHART
NS = NOT SHOWN

PART NUMBER	P/N ITEM 2	P/N ITEM 3	P/N ITEM 4	P/N ITEM 5	P/N ITEM 6	P/N ITEM 7	P/N ITEM 8	P/N ITEM 9
UBMSXXSXXTXX	UBBPSXXT	UBFPSXXT	UBFEWT	35170	M921	17328	18577	SUS10206
UBMSXXSXXFXX	UBBPSXXF	UBFPSXXF	UBFEWF	36101	18291	31295	24307	SUS10206S

TENSIONER CHART	
PART NUMBER	P/N ITEM 10
UBMSXXSXXXTX	UBTT
UBMSXXSXXXFX	UBTF

COVER DOOR CHART	
PART NUMBER	P/N ITEM 11
UBMSXXSXXXXD	UBDT
UBMSXXSXXXXS	UBDF

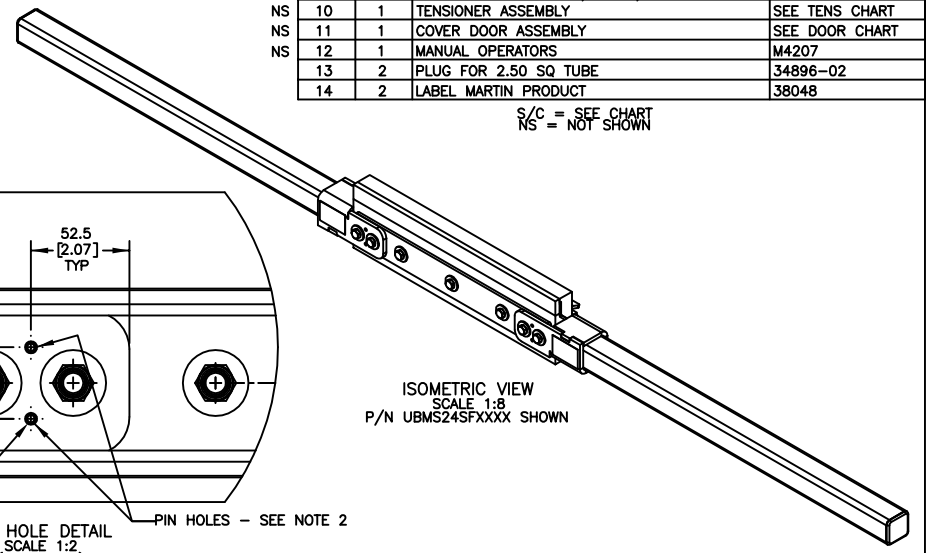

ISOMETRIC VIEW
SCALE 1:8
P/N UBMS24SFXXXX SHOWN

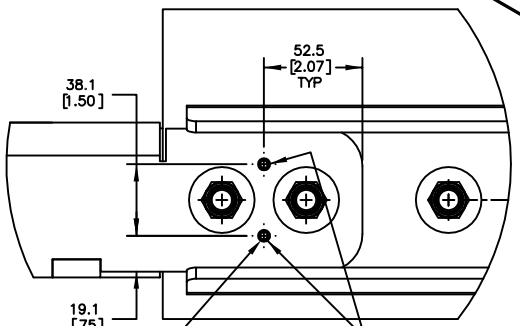

PIN HOLE DETAIL
SCALE 1:2
(BACK SIDE)

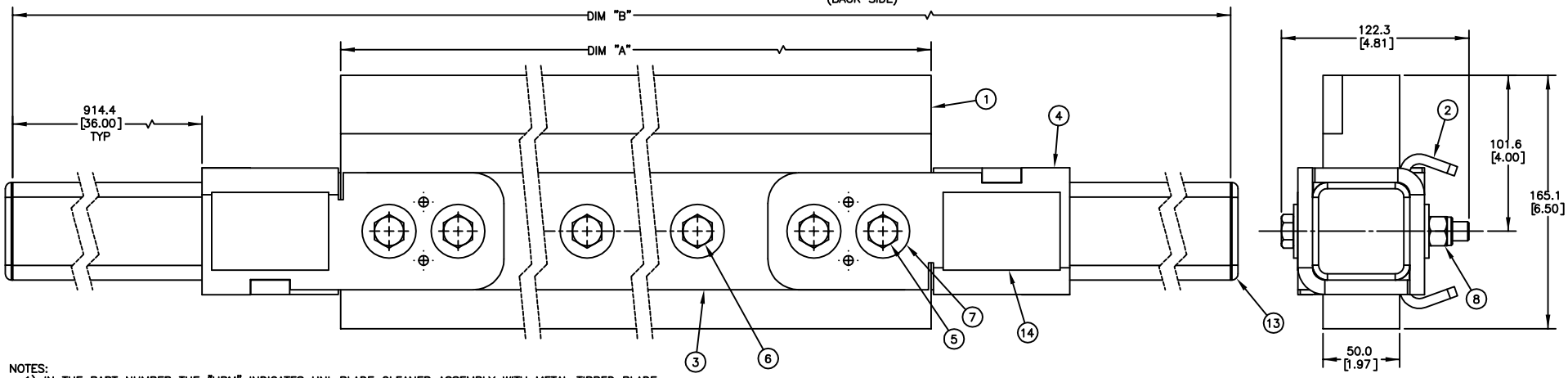

NOTES:
1) IN THE PART NUMBER THE "UBM" INDICATES UNI-BLADE CLEANER ASSEMBLY WITH METAL TIPPED BLADE.
THE FIRST "SXX" INDICATES THE BELT WIDTH IN INCHES.
THE NEXT "SX" INDICATES THE BLADE COVERAGE IN INCHES:
S6 = 6.00" LESS BELT WIDTH (S6 NOT AVAILABLE ON 24.00" & 72.00" BELT WIDTHS)
SF = FULL BELT WIDTH COVERAGE (SF NOT AVAILABLE ON 66.00" BELT WIDTH)
THE NEXT "X" INDICATES THE BLADE COLOR OPTIONS:
O = ORANGE
B = BROWN
G = GREEN
THE NEXT "X" INDICATES THE MAINFRAME OPTIONS:
T = STEEL MARTIN ORANGE
F = 316 STAINLESS STEEL
THE NEXT "X" INDICATES THE TENSIONER OPTIONS:
T = STEEL MARTIN ORANGE
F = 316 STAINLESS STEEL
N = NO TENSIONER
THE LAST "X" INDICATES THE COVER DOOR OPTIONS:
D = STEEL COVER DOOR
S = 316 STAINLESS STEEL COVER DOOR
N = NO COVER DOOR

2) AFTER ASSEMBLING USE THE EXISTING ⌀6.4 [.25] HOLES ON END WELDMENT AS PILOT HOLES TO DRILL 2 X ⌀6.15 [.242] HOLES ↧ 6.4 [.25] THROUGH THE SIDE PLATE (P/N UBBPSXXX). TYPICAL EACH END. AFTER DRILLING INSERT THE SLOTTED SPRING PINS INTO PIN HOLES.

© Copyright 2024 Martin Engineering. All rights reserved. Covered by U.S. and foreign patents pending and issued. ®© and ™ indicate trademarks of Martin Engineering.

MARTIN ENGINEERING
NEPONSET, IL USA

DRAWN JAH
DATE 11/25/24
CHECKED

TITLE
UNI-BLADE CLEANER ASSEMBLY WITH METAL TIPPED BLADE

ENG. JLS
DATE 11/25/24
I.E. SJS
DATE 11/25/24
APPROVED JJS
DATE 11/25/24

DRAWING NUMBER
PR14712B
UBMSXXSXXXXX
SCALE 1:2

REV	DESCRIPTION	ECN	DATE	BY

MATERIAL: SEE NOTES | FINISH: SEE NOTES | WEIGHT: SEE CHART

UNLESS OTHERWISE SPECIFIED
DIMENSIONS ARE IN MM [INCH]
DIMENSIONS FOR REFERENCE ONLY
TOLERANCES IN MM [INCH]: .X = ±. .XX = ±. .XXX = ±.
SURFACE FINISH: ✓
ANGULAR: ±1
DRAFT ANGLE: –

SOLIDWORKS

This drawing is the confidential information of Martin Engineering Company and cannot be shared with any third party without Martin Engineering Company's express prior written consent.