PART NUMBER	BELT WIDTH	DIMENSION "A" BLADE COVERAGE	DIMENSION "B" FRAME LENGTH
C1QCH3S18S8XXPX	457.2 [18.00]	254.0 [10.00]	863.6 [34.00]
C1QCH3S18S6XXPX	457.2 [18.00]	304.8 [12.00]	863.6 [34.00]
C1QCH3S18S4XXPX	457.2 [18.00]	355.6 [14.00]	863.6 [34.00]
C1QCH3S24S8XXPX	609.6 [24.00]	406.4 [16.00]	1168.4 [46.00]
C1QCH3S24S6XXPX	609.6 [24.00]	457.2 [18.00]	1168.4 [46.00]
C1QCH3S24S4XXPX	609.6 [24.00]	508.0 [20.00]	1168.4 [46.00]
C1QCH3S30S8XXPX	762.0 [30.00]	558.8 [22.00]	1320.8 [52.00]
C1QCH3S30S6XXPX	762.0 [30.00]	609.6 [24.00]	1320.8 [52.00]
C1QCH3S30S4XXPX	762.0 [30.00]	660.4 [26.00]	1320.8 [52.00]
C1QCH3S36S8XXPX	914.4 [36.00]	711.2 [28.00]	1524.0 [60.00]
C1QCH3S36S6XXPX	914.4 [36.00]	762.0 [30.00]	1524.0 [60.00]
C1QCH3S36S4XXPX	914.4 [36.00]	812.8 [32.00]	1524.0 [60.00]
C1QCH3S42S8XXPX	1066.8 [42.00]	863.6 [34.00]	1828.8 [72.00]
C1QCH3S42S6XXPX	1066.8 [42.00]	914.4 [36.00]	1828.8 [72.00]
C1QCH3S42S4XXPX	1066.8 [42.00]	965.2 [38.00]	1828.8 [72.00]
C1QCH3S48S8XXPX	1219.2 [48.00]	1016.0 [40.00]	1981.2 [78.00]
C1QCH3S48S6XXPX	1219.2 [48.00]	1066.8 [42.00]	1981.2 [78.00]
C1QCH3S48S4XXPX	1219.2 [48.00]	1117.6 [44.00]	1981.2 [78.00]

NOTES:

1) ALL DIMENSIONS ARE GIVEN IN MILLIMETERS [INCHES] AND ARE FOR REFERENCE ONLY.
2) IN THE C1QCH3 PART NUMBER THE FIRST SXX INDICATES THE BELT WIDTH IN STANDARD INCH UNITS FOR BELT WIDTHS 18 THRU 48.
   S18 = 18
   S48 = 48
   THE NEXT SX INDICATES THE LESS BELT WIDTH BLADE COVERAGE IN STANDARD INCH UNITS.
   00 = NO BLADE
   S4 = 4 LESS BELT WIDTH
   S6 = 6 LESS BELT WIDTH
   S8 = 8 LESS BELT WIDTH
   THE FOURTH X IN THE PART NUMBER INDICATES THE BLADE COLOR:
   0 = NO BLADE
   B = BROWN
   T = TAN
   G = GREEN
   N = NAVY BLUE
   O = ORANGE
   C = YELLOW WITH CERAMIC BEADS
   THE FIFTH X INDICATES IF THE BLADE IS SOLID OR SEGMENTED:
   0 = SEGMENTED BLADE / NO BLADE
   1 = SOLID BLADE / CERAMIC BLADE ONLY AVAILABLE AS SOLID
   THE P IN THE PART NUMBER INDICATES A PAINTED STEEL MAINFRAME
   THE LAST X INDICATES THE TENSIONER OPTIONS:
   △4 BLANK = NO TENSIONER
   P= STAINLESS STEEL SPRING TENSIONER (38180-SS)
   S = PAINTED SPRING TENSIONER (38180)
   ADD AN L TO THE END OF THE PART NUMBER TO GET A CLEANER LESS THE TORQUE TUBES.
3) THE FRAME IS ADJUSTABLE TO DESIRED LENGTH.
4) FOR BELT WIDTHS 54 AND OVER A DUAL SPRING TENSIONER ASSEMBLY IS REQUIRED. SEE S50129-SDS.
5) WHERE EXTREME OR UNUSUAL CONDITIONS EXIST, OR SPECIAL MAINFRAME LENGTHS ARE REQUIRED CONTACT MARTIN ENGINEERING.
6) INSIDE CHUTE WALL WIDTH MUST BE A MINIMUM OF BELT WIDTH PLUS 127.0 [5.00] IN ORDER FOR CLEANER TO BE INSTALLED WITH TENSIONERS BOLTED DIRECTLY TO CHUTE WALL.
7) REFER TO OPERATOR'S MANUALS M3263 AND M4124 FOR INSTALLATION INSTRUCTIONS.
8) CLEANER CAN BE LOCATED ANYWHERE ALONG THE ARC, AS LONG AS THE MAINFRAME IS OUT OF MATERIAL TRAJECTORY AND THE BLADE TIPS ARE BELOW THE HORIZONTAL CENTERLINE OF THE HEAD PULLEY.
9) THE QC1+ HD PRE-CLEANER BLADE IS DESIGNED TO REMOVE THE INITIAL CARRYBACK ONLY. DO NOT OVER TENSION.
10) THE QC1+ HD PRE-CLEANER BLADE IS DESIGNED FOR HEAD PULLEYS WITH A DIAMETER OF 406.4 [16.00] TO 558.8 [22.00].
11) BLADE COVERAGE IS LESS THAN BELT WIDTH, DUE TO POSSIBLE MISTRACKING OR DAMAGED EDGES OF THE BELT.
12) INSIDE CHUTE WALL WIDTH MUST BE A MINIMUM OF BELT WIDTH PLUS 127.0 [5.00] IN ORDER FOR CLEANER TO BE INSTALLED WITH TENSIONERS BOLTED DIRECTLY TO THE CHUTE WALL.
△4 13) P/N'S FOR 12 X 18 DOOR:
   PAINTED STEEL DOOR: CYA-1218
   304 SS DOOR: CYA-1218C
   316 SS DOOR: CYA-1218S

ASSEMBLY PART NO.	COLOR
C1QCH3SXXSXBXPX	BROWN
C1QCH3SXXSXTXPX	TAN
C1QCH3SXXSXGXPX	GREEN
C1QCH3SXXSXNXPX	NAVY BLUE
C1QCH3SXXSXOXPX	ORANGE
C1QCH3SXXSXC1PX	YELLOW WITH CERAMIC BEADS

ITEM	QTY	DESCRIPTION	PART NUMBER
1	1	MARTIN QC1+ HD BLD SS MNFRM ASM	C1QCH3SXXSXXXFX
2	1	MARTIN SPRING TENSIONER ASM	SEE NOTE 2
3	1	MARTIN LOW PROFILE DOOR 12X18	SEE NOTE 13

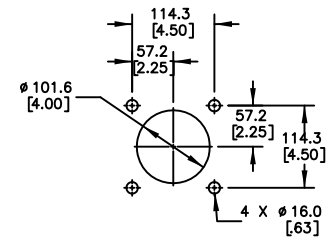

TENSIONER CHUTEWALL CUTOUT DETAIL
TYPICAL BOTH SIDES

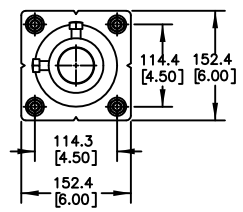

FARSIDE MOUNT DETAIL

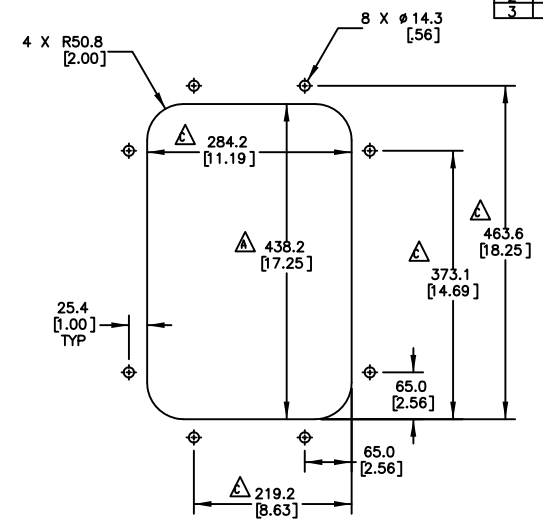

CHUTE CUTOUT DETAIL
FOR STEEL ACCESS DOOR

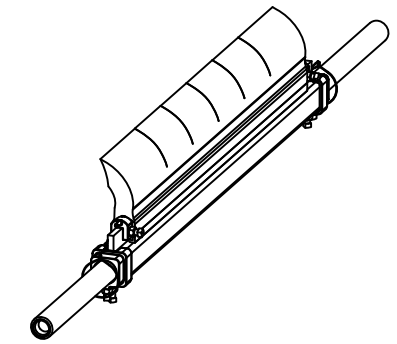

QC1+ HD DETAIL
SCALE: 1/8=1

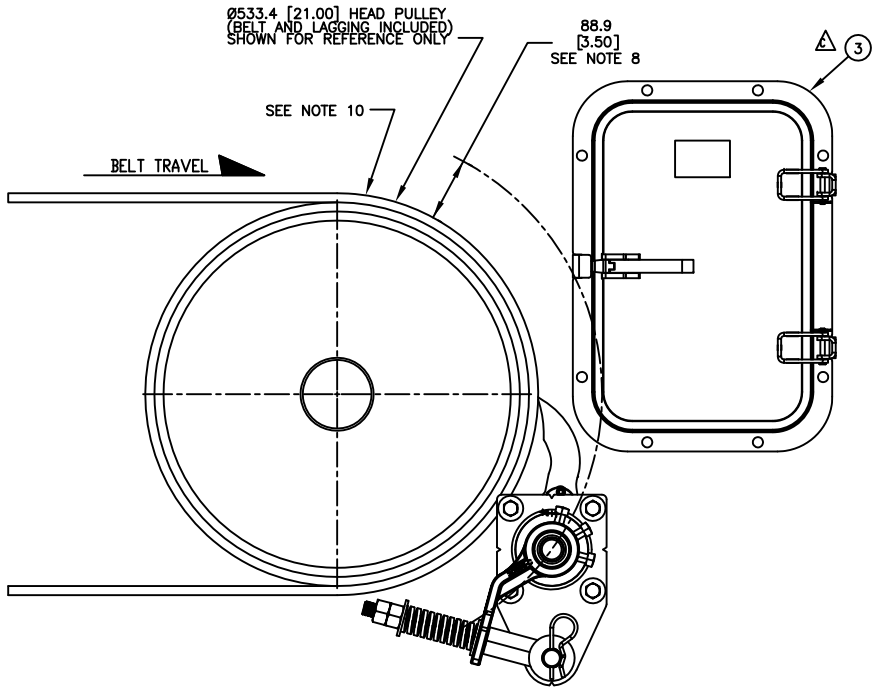

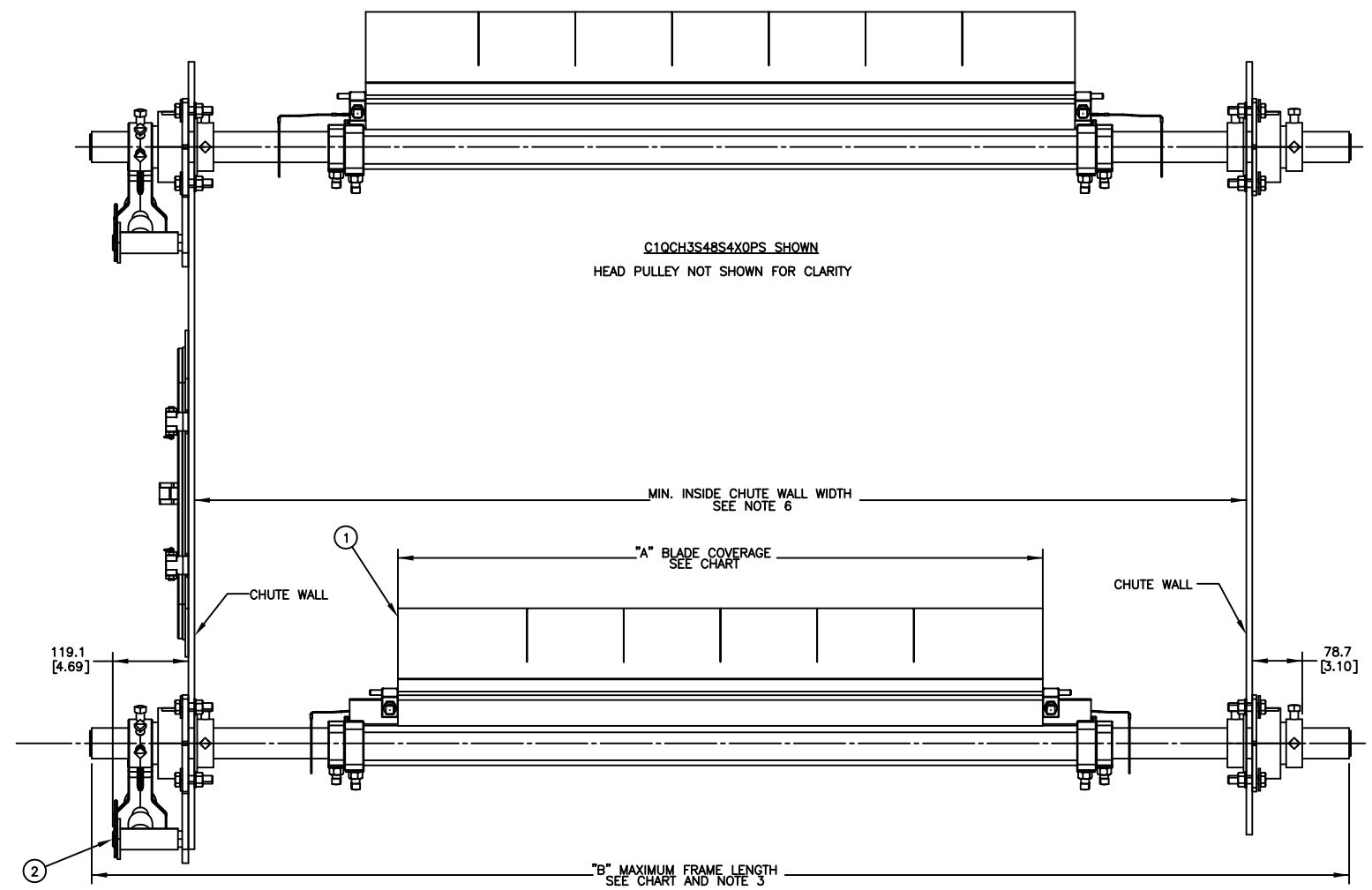

C1QCH3S48S4X0PS SHOWN
HEAD PULLEY NOT SHOWN FOR CLARITY

C1QCH3S48S8X0PS SHOWN
HEAD PULLEY NOT SHOWN FOR CLARITY

REV	DESCRIPTION	ECN	DATE	BY
C	REDRAWN IN SOLIDWORKS; CHG'D ITEM 3 DESCRIPTION FROM 9X12 TO 12X18; DIM 209.6 TO 284.2, 289.1 TO 438.2, 224.0 TO 373.1, 314.5 TO 463.6, 144.5 TO 219.2; IN TITLE BLOCK, CHG "228.6[9.0] X 304.8[12.0]" TO "304.8[12.0] X 457.5[18.0]"; RM'D TWIST TENSIONER OPTION IN NOTE 2; ON NOTE 13, CHG'D DOOR SIZE AND P/N FROM 9X12 TO 12X18;UPDATE PICTORALLY	16025	01/07/22	JRB

MATERIAL: | FINISH:- | WEIGHT:-

UNLESS OTHERWISE SPECIFIED
DIMENSIONS ARE IN MM [INCH]
DIMENSIONS FOR REFERENCE ONLY
TOLERANCES IN MM [INCH]: .X = ±- .XX = ±- .XXX = ±-
SURFACE FINISH: 12.5
ANGULAR: ±1
DRAFT ANGLE: -

SOLIDWORKS | SUPERCEDES SAME SIZE DATED 05/14/19

© Copyright 2022 Martin Engineering. All rights reserved. Covered by U.S. and foreign patents pending and issued. ® and TM indicate trademarks of Martin Engineering.

MARTIN ENGINEERING
NEPONSET, IL USA

TITLE: MARTIN QC1+HD SS 3-PC ASM TENSIONER ASM △4 & STEEL DOOR 304.8[12.0] X 457.5[18.0]

DRAWING NUMBER: S50129-SSS

DRAWN	JRB	01/07/22
CHECKED		
ENG.	BAK	03/07/22
I.E.	JRB	03/08/22
APPROVED	JRB	03/08/22
SCALE	3:16	