| ASSEMBLY PART NUMBER | DIM "A" | DIM "B" | DIM "C" | DIM "D" | APPROX. WEIGHT KG |
|---|---|---|---|---|---|
| CPVHAS30XXXXXX | 838.2 [33.00] | 424.7 [16.72] | 318.0 [12.52] | 1676.4 [66.00] | 42.5 |
| CPVHAS36XXXXXX | 990.6 [39.00] | 498.8 [19.64] | 318.0 [12.52] | 1828.8 [72.00] | 46.0 |
| CPVHAS42XXXXXX | 1143.0 [45.00] | 578.7 [22.78] | 470.4 [18.52] | 1981.2 [78.00] | 51.0 |
| CPVHAS48XXXXXX | 1295.4 [51.00] | 651.2 [25.64] | 470.4 [18.52] | 2133.6 [84.00] | 54.0 |
| CPVHAS54XXXXXX | 1447.8 [57.00] | 727.4 [28.64] | 470.4 [18.52] | 2286.0 [90.00] | 57.5 |
| CPVHAS60XXXXXX | 1600.2 [63.00] | 803.6 [31.64] | 673.6 [26.52] | 2438.4 [96.00] | 63.0 |
| CPVHAS66XXXXXX | 1752.6 [69.00] | 879.8 [34.64] | 673.6 [26.52] | 2590.8 [102.00] | 66.5 |
| CPVHAS72XXXXXX | 1905.0 [75.00] | 956.0 [37.64] | 673.6 [26.52] | 2743.2 [108.00] | 69.5 |
| CPVHAS78XXXXXX | 2057.4 [81.00] | 1032.2 [40.64] | 902.2 [35.52] | 2895.6 [114.00] | 78.0 |
| CPVHAS84XXXXXX | 2209.8 [87.00] | 1108.4 [43.64] | 902.2 [35.52] | 3048.0 [120.00] | 81.5 |
| CPVHAS96XXXXXX | 2514.6 [99.00] | 1260.8 [49.64] | 902.2 [35.52] | 3352.8 [132.00] | 88.0 |
| CPVHASA8XXXXXX | 2819.4 [111.00] | 1413.2 [55.64] | 1283.2 [50.52] | 3657.6 [144.00] | 99.5 |
| CPVHASC0XXXXXX | 3124.2 [123.00] | 1565.6 [61.64] | 1283.2 [50.52] | 3962.4 [156.00] | 106.0 |

| ITEM | QTY | DESCRIPTION | PART NUMBER |
|---|---|---|---|
| 1 | 1 | HEAVY DUTY V-PLOW ASSEMBLY | CPVHASXXXXXXXX |

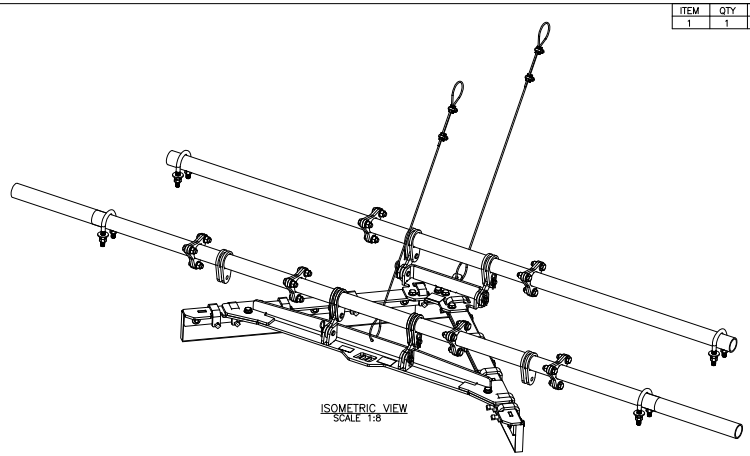


| FRAME MATERIAL CHART | |
|---|---|
| ASSEMBLY PART NUMBER | FRAME MATERIAL |
| CPVHASXXXXXXTX | MILD STEEL (PAINTED) |
| CPVHASXXXXXXSX | 304 STAINLESS STEEL |
| CPVHASXXXXXXFX | 316 STAINLESS STEEL |

| BLADE CHART | | |
|---|---|---|
| ASSEMBLY PART NUMBER | URETHANE SIDE BLADE P/N | RUBBER BLADE P/N |
| CPVHAS30RXXCXX | ----- | CPVHBS30R |
| CPVHAS30XXXCXX | CPVHBS30X | ----- |
| CPVHAS36RXXCXX | ----- | CPVHBS36R |
| CPVHAS36XXXCXX | CPVHBS36X | ----- |
| CPVHAS42RXXCXX | ----- | CPVHBS42R |
| CPVHAS42XXXCXX | CPVHBS42X | ----- |
| CPVHAS48RXXCXX | ----- | CPVHBS48R |
| CPVHAS48XXXCXX | CPVHBS48X | ----- |
| CPVHAS54RXXCXX | ----- | CPVHBS54R |
| CPVHAS54XXXCXX | CPVHBS54X | ----- |
| CPVHAS60RXXCXX | ----- | CPVHBS60R |
| CPVHAS60XXXCXX | CPVHBS60X | ----- |
| CPVHAS66RXXCXX | ----- | CPVHBS66R |
| CPVHAS66XXXCXX | CPVHBS66X | ----- |
| CPVHAS72RXXCXX | ----- | CPVHBS72R |
| CPVHAS72XXXCXX | CPVHBS72X | ----- |
| CPVHAS78RXXCXX | ----- | CPVHBS78R |
| CPVHAS78XXXCXX | CPVHBS78X | ----- |
| CPVHAS84RXXCXX | ----- | CPVHBS84R |
| CPVHAS84XXXCXX | CPVHBS84X | ----- |
| CPVHAS96RXXCXX | ----- | CPVHBS96R |
| CPVHAS96XXXCXX | CPVHBS96X | ----- |
| CPVHASA8RXXCXX | ----- | CPVHBSA8R |
| CPVHASA8XXXCXX | CPVHBSA8X | ----- |
| CPVHASC0RXXCXX | ----- | CPVHBSC0R |
| CPVHASC0XXXCXX | CPVHBSC0X | ----- |

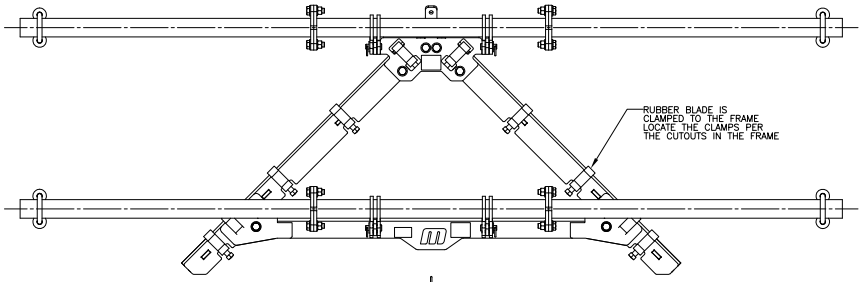


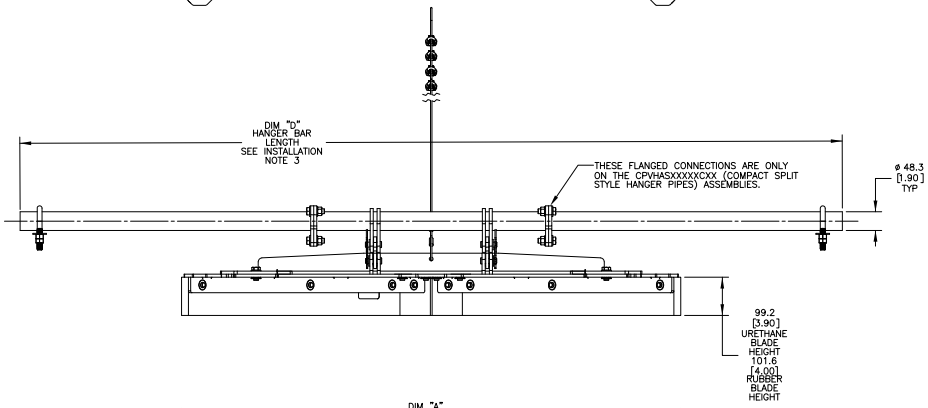


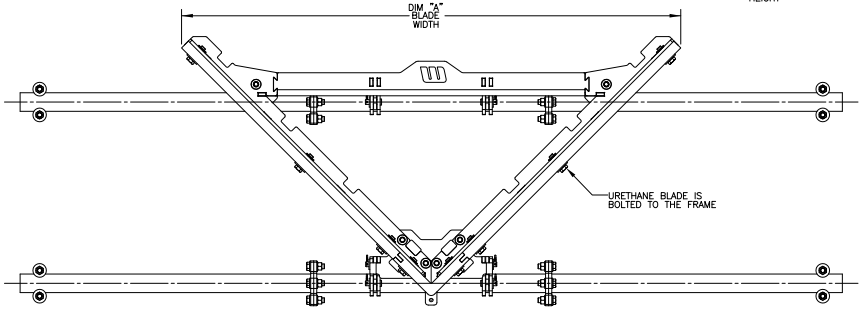


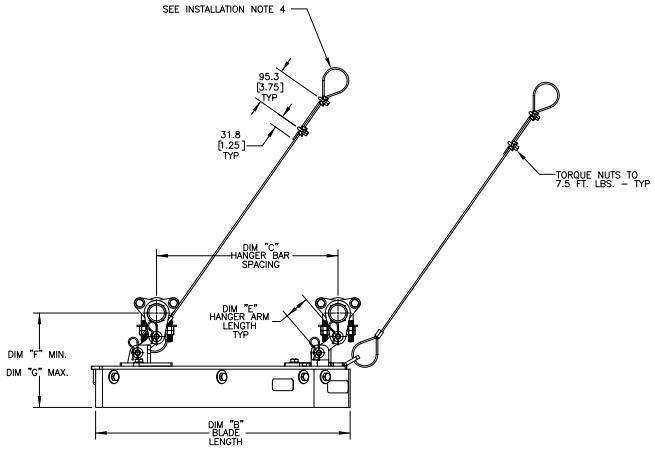


| URETHANE BLADE COLOR CHART | | | |
|---|---|---|---|
| ASSEMBLY PART NUMBER | URETHANE NOSE P/N | URETHANE SIDE BLADE P/N | BLADE COLOR |
| CPVHASXX0XXXXX | CPVHB001O | CPVHBSXX0 | ORANGE |
| CPVHASXXBXXXXX | CPVHB001B | CPVHBSXXB | BROWN |
| CPVHASXXGXXXXX | CPVHB001G | CPVHBSXXG | GREEN |

| HANGER ARM CHART | | | | |
|---|---|---|---|---|
| ASSEMBLY PART NUMBER | HANGER ARM P/N | DIM "E" | DIM "F" MIN. | DIM "G" MAX. |
| CPVHASXXX01XXX | CPVTP1002201X | 65 [2.56] | 215 [8.46] | 255 [10.04] |
| CPVHASXXX02XXX | CPVTP1002202X | 175 [6.89] | 325 [12.79] | 365 [14.37] |
| CPVHASXXX03XXX | CPVTP1002203X | 200 [7.87] | 350 [13.77] | 390 [15.35] |
| CPVHASXXX04XXX | CPVTP1002204X | 300 [11.81] | 450 [17.71] | 490 [19.29] |
| | | | A | A |

NOTES:
1) ALL DIMENSIONS ARE GIVEN IN MILLIMETERS [INCHES].
2) ALL DIMENSIONS ARE FOR REFERENCE ONLY.
3) IN THE PART NUMBER THE SXX AFTER THE CPVHA INDICATES THE BELT WIDTH IN STANDARD INCH UNITS FOR BELT WIDTHS 18.00 THRU 96.00.
   SA8 = 108.00 INCHES
   SC0 = 120.00 INCHES
   THE NEXT X INDICATES THE BLADE TYPE:
   R = RUBBER BLADE (1 PC BLADE) (CLAMPED TO THE FRAME)
   O = ORANGE URETHANE BLADE (3 PC BLADE)
   B = BROWN URETHANE BLADE (3 PC BLADE)
   G = GREEN URETHANE BLADE (3 PC BLADE) (BOLTED TO THE FRAME)
   THE NEXT TWO XX'S INDICATE THE HANGER ARM USED:
   01 = 01 HANGER ARM THRU 04 = 04 HANGER ARM (SEE CHART FOR SIZE)
   THE NEXT X INDICATES THE HANGER PIPE TYPE:
   C = COMPACT SPLIT STYLE HANGER PIPES
   S = 1 PIECE SOLID STYLE HANGER PIPES
   THE NEXT X INDICATES THE TYPE OF STEEL MATERIAL USED:
   T = PAINTED MILD STEEL
   S = 304 STAINLESS STEEL
   F = 316 STAINLESS STEEL
   THE LAST X INDICATES THE ASSEMBLY OPTIONS:
   A = UNIT IS SHIPPED ASSEMBLED
   B = UNIT IS SHIPPED ASSEMBLED WITH HUB MOUNT KIT.
   U = UNIT IS SHIPPED UNASSEMBLED
   V = UNIT IS SHIPPED UNASSEMBLED WITH HUB MOUNT KIT
A 4) WARNING LABELS (P/N'S 23395 AND 38277) ARE SHIPPED LOOSE AND ARE TO BE PLACED ON BOTH SIDES OF THE CONVEYOR NEAR THE PRODUCT.

INSTALLATION NOTES:
1) REFER TO OPERATORS MANUAL FOR PROPER INSTALLATION AND MAINTENANCE INSTRUCTIONS. ALSO REFER TO THE MANUAL FOR REPLACEMENT PARTS.
2) V-PLOW IS DESIGNED FOR TAIL PULLEY PROTECTION ONLY, NOT FOR REMOVING MATERIAL CARRYBACK.
3) HANGER BARS ARE LONGER THAN REQUIRED, FIELD MODIFY THE LENGTH AS NEEDED FOR PROPER MOUNTING. IF MOUNTED THRU THE STRINGER OR STEEL PLATE DRILL OR CUT 2-1/2" DIAMETER HOLES FOR MOUNTING THE HANGER BARS.
4) THE LANYARD CABLES ARE TO BE MOUNTED TO THE CONVEYOR STRUCTURE.

SHEET 2 OF 4

© Copyright 2018 Martin Engineering. All rights reserved. Covered by U.S. and foreign patents pending and issued. © and TM indicate trademarks of Martin Engineering.

MARTIN ENGINEERING-USA
NEPONSET, IL USA

| NO. | DESCRIPTION | ECN | DATE | BY |
|---|---|---|---|---|
| C | ADDED SHEET 4 | 15716 | 08/27/20 | MH |
| B | (SHT 1 & 2) ADDED HUB MOUNT KIT OPTIONS TO NOTE 7 / (SHT 3) ADDED OPTIONAL HUB MOUNT DETAILS (PR13887) | ---- | 11/06/19 | JAH |
| A | (SHT 1 & 2) UPDATED DIM "F" & DIM "G" IN CHART / (SHT 3) ADDED PIPE EAR LEADER NOTE | 15317 | 02/25/19 | RND |

SOLIDWORKS REVISION

TITLE: V-PLOW MODULAR ASM 30 - 120 BELT WIDTHS

SALES DRAWING

PR13654 S50126

DRAWN RND DATE 09/13/18
CHECKED
ENG. JAP DATE 9/20/2018
APPROVED JRS DATE 9/27/2018
SCALE 5:32