S31725

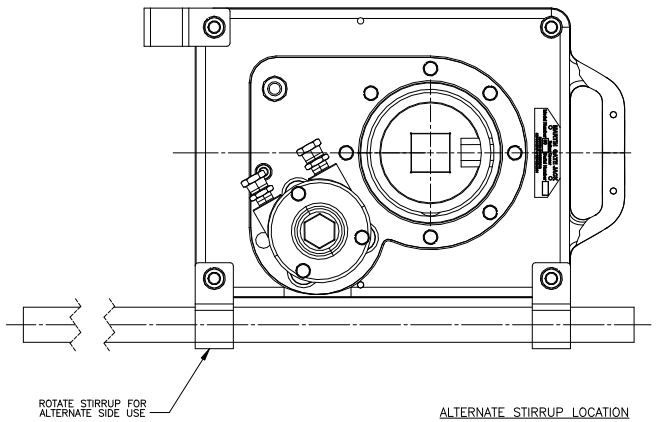

ALTERNATE STIRRUP LOCATION

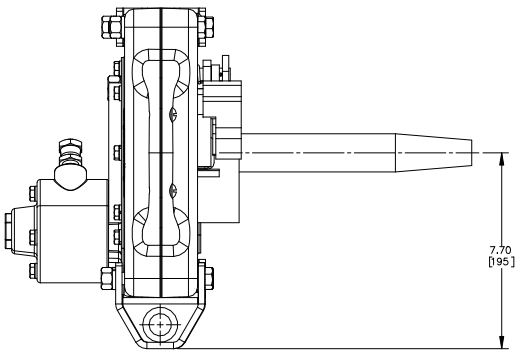

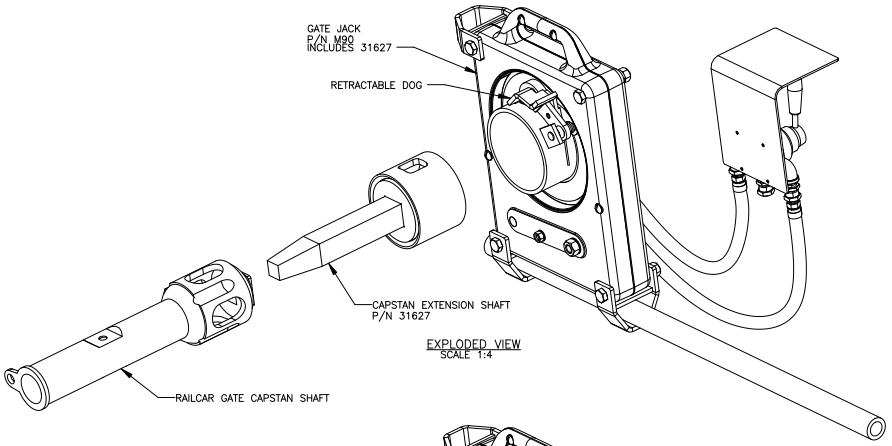

EXPLODED VIEW
SCALE 1:4

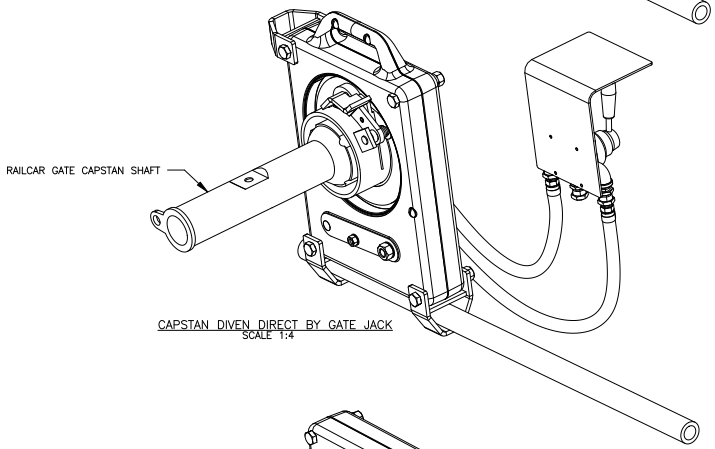

CAPSTAN DIVEN DIRECT BY GATE JACK
SCALE 1:4

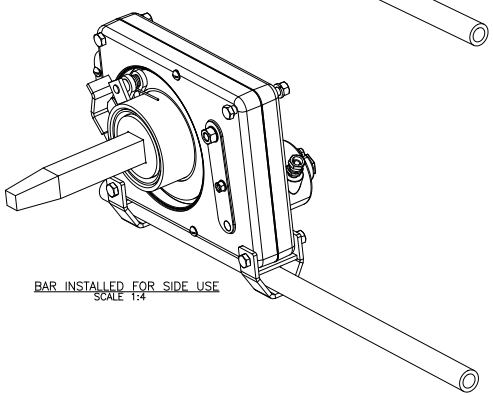

BAR INSTALLED FOR SIDE USE
SCALE 1:4

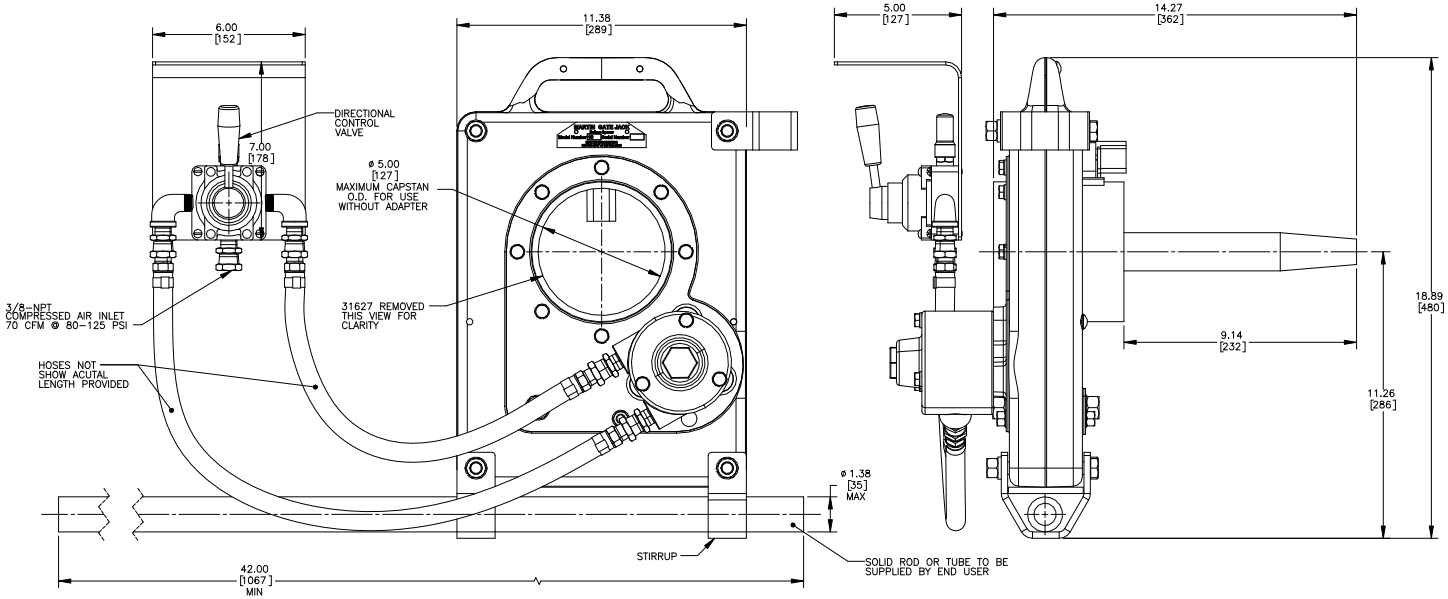

DEFAULT STIRRUP LOCATION

NOTES:
1) REFER TO OPERATORS MANUAL M3203 FOR OPERATING INSTRUCTIONS.
2) THE LONGEST PROTRUDING END OF THE SUPPORT ROD OR TUBING NEEDS TO EXTEND ON THE OPPOSIDE SIDE OF THE DIRECTION THAT THE GATE JACK IS ROTATING.
3) UNIT WEIGHT (LESS SUPPORT ROD OR TUBE): 75 LBS

NO.	DESCRIPTION	ECN	DATE	BY
A	REDRAWN IN SOLIDWORKS/CHGD DRW NO FROM 31725 TO S31725	16280	03/07/23	JAP

SOLIDWORKS — REVISION — SUPERSEDES SAME DATED 11/13/89

© Copyright 2023 Martin Engineering. All rights reserved. Covered by U.S. and foreign patents pending and issued. ®, © and ™ indicate trademarks of Martin Engineering.

MARTIN ENGINEERING
NEPONSET, IL USA

TITLE: MARTIN® GATE JACK™

SALES DRAWING

S31725

SCALE 3:8

DRAWN JAP DATE 03/07/23
CHECKED
ENG. MPB DATE 03/14/23
APPROVED JAP DATE 03/31/23

This drawing is the confidential information of Martin Engineering Company and cannot be shared with any third party without Martin Engineering Company's express prior written consent.