PART NUMBER	DESCRIPTION	P/N ITEM 32	QTY ITEM 33	QTY ITEM 34	QTY ITEM 35	WEIGHT (KG)
MHF10UC02-S-0	MHF-1500 120V 60-60HZ 1 PH 2 POLE STD SPEED NO WEDGE MFR	V-826827	0	0	0	15.9
MHF10UC02-S-V	MHF-1500 120V 60-60HZ 1 PH 2 POLE STD SPEED W/ WEDGE MFR	V-826827	1	4	4	21.3
MHF10UC02-V-0	MHF-1500 120V 60-60HZ 1 PH 2 POLE VARIABLE SPEED NO WEDGE MFR	V-826827-VS	0	0	0	15.9
MHF10UC02-V-V	MHF-1500 120V 60-60HZ 1 PH 2 POLE VARIABLE SPEED W/ WEDGE MFR	V-826827-VS	1	4	4	21.6

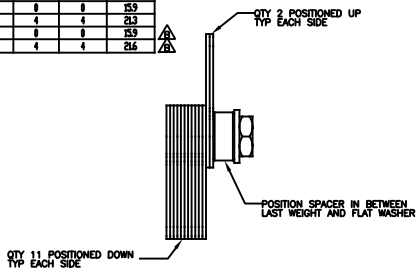

WEIGHT DETAIL
SEE MFR NOTE 3

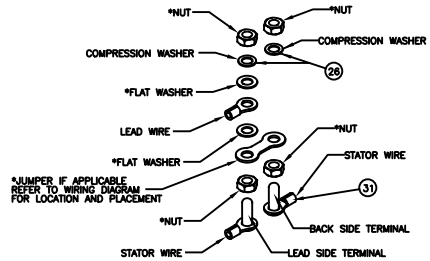

TERMINAL BLOCK HARDWARE DETAIL
* INDICATES HARDWARE COMES WITH TERMINAL BLOCK

	ITEM	QTY.	DESCRIPTION	PART NUMBER	ITEM TYPE	
	1	1	CASE MACHINED 4 BOLT 10 FR	801030	P	
	2	1	STATOR 220-230/380-460V 50/60HZ 3 PH 2 POLE 10 FR	810030-02	P	
	3	1	SHAFT ASSEMBLY WITH ROTOR 2 & 4 POLE 10 FR	803030		N
	4	2	O-RING #247 4.609 ID X .139 CS VITON 75A	818012-V	P	
	5	2	BEARING FLANGE MACHINED 10 FR	802030	P	
	6	2	O-RING #250 4.984 ID X .139 CS N 70A	818011	P	
	7	2	BEARING RADIAL BALL 6303.2ZR.C3	815030	P	
	8	26	WEIGHT ECCENTRIC FIXED MHF 10 FRAME	V-807093		N
	9	2	SPACER FOR ECCENTRIC WEIGHT 10 FR	CG-100471		N
	10	2	WASHER FLAT M14 NARROW TYPE A ZP (P)	39587	P	
	11	2	NUT HEX JAM M14 X 1.5 CLASS 04 ZP (P)	CG-100463	P	
	12	2	WEIGHT COVER 10 FR	805030	P	
	13	1	TERMINAL BLOCK 6 STUD 40 X 25 X 10MM	812003	P	
	14	1	CABLE PROTECTION SHEATH 25MM X 25MM	814005	P	
	15	1	O-RING #240 3.734 ID X .139 CS VITON 75A	34687	P	
	16	1	TERMINAL BOX COVER 10 FR	806030	P	
	17	1	CORD GRIP LIQUID TIGHT NYLON 1/2NPT	194851	P	
	18	1	PLUG 1/2 NPT INTERNAL HEX ZP	39268	P	
	19	1	FOAM RUBBER STRIP 9.00 X 3.00 X 1.00	813003	P	
	20	16	WASHER COMP D8 SER SAFETY SCHNORR "VS" MAGNI 565	513004	P	
	21	8	SCREW SHC LOW PROFILE HD M8 X 1.25 X 20 CL 8.8 BO (P)	39588	P	
	22	8	SCREW SHC M8 X 1.25 X 20 CL 12.9 GEO 321 (P)	515507	P	
	23	4	WASHER COMP D5 SER SAFETY SCHNORR "VS" MAGNI 565	CG-100460	P	
	24	4	SCREW SHC M5 X 0.8 X 14 CL 12.9 GEO 321 (P)	822021	P	
	25	4	SCREW DRIVE NO. 7 X 1/4 LG ZP (B)	32873	P	
	26	9	WASHER COMP D4 SER SAFETY SCHNORR "S" ZPY	513001	P	
	27	2	SCREW SHC M4 X 0.7 X 10 CL 12.9 BO (P)	515572	P	
	28	4	SCREW SS FLAT POINT M5 X 0.8 X 5 ALLOY STEEL BO (P)	CG-100461	P	
	29	1	SCREW SET HSCP M8 X 1.25 X 10 ALLOY STL BLACK (P)	509010	P	
	30	1	SCREW HHC M4 X 0.7 X 10 CL 8.8 ZP GREEN (P)	CG-100462	P	
	31	6	RING TRMNL CRIMP #8 STUD 20-18 AWG NON-INSUL (P)	SUS10071	P	
NS	32	1	SWITCHBOX VFD FOR MHF10 VIBRATOR	SEE CHART		N
	33	S/C	WEDGE BRACKET	223014		N
	34	S/C	WASHER COMP BELLEVILLE 1/2: OD 1.00: THK .082 ZP	517702		N
	35	S/C	SCREW HHC 1/2-13NC X 1-1/2 GR 5 ZP	11763		N
	36	1	STICKER GROUND SYMBOL	821001	P	
	37	1	LABEL WARNING EXP ATMOSPHERE	821002	P	
NS	38	1	WIRING DIAGRAM TAG	518213	P	
	39	1	NAMEPLATE MARTIN SS	820003		N
NS	40	1	OPERATOR'S MANUAL	M3910		N

NS = NOT SHOWN
S/C = SEE CHART

ITEM TYPE "P" EXIST IN PHANTOM BOM (MHF10XX02)
ITEM TYPE "N" IS A NORMAL ITEM UNDER INDIVIDUAL ASM P/N

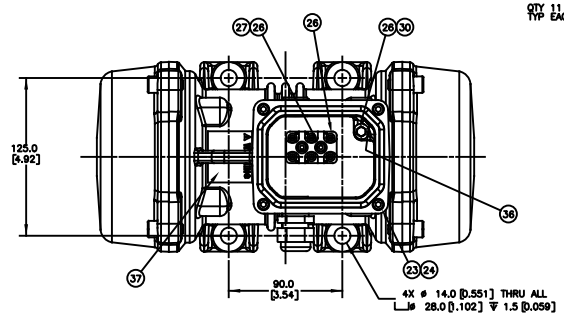

TERMINAL BOX COVER AND NAMEPLATE
REMOVED FOR CLARITY

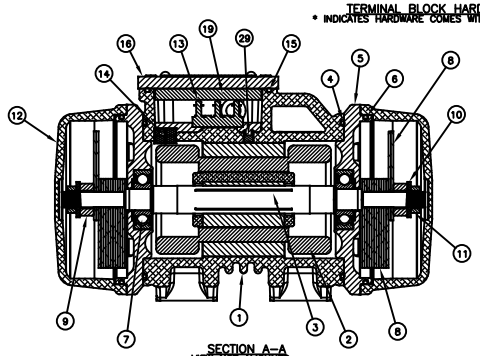

SECTION A-A
VIEW NOT ALIGNED

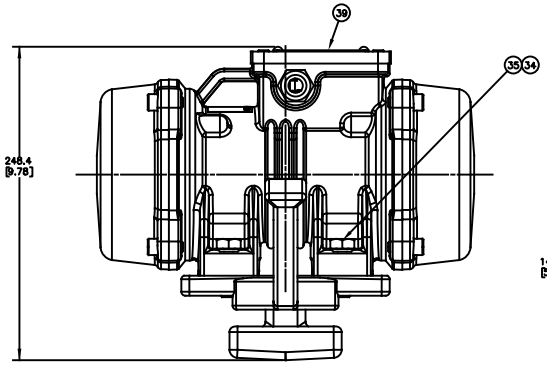

P/N MHF10UC02-S-W
SHOW IN FRONT VIEW AND RIGHT VIEW

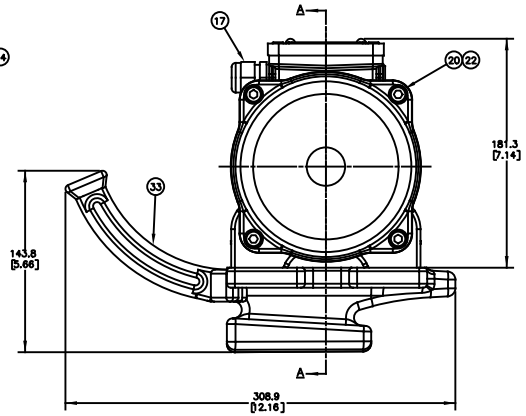

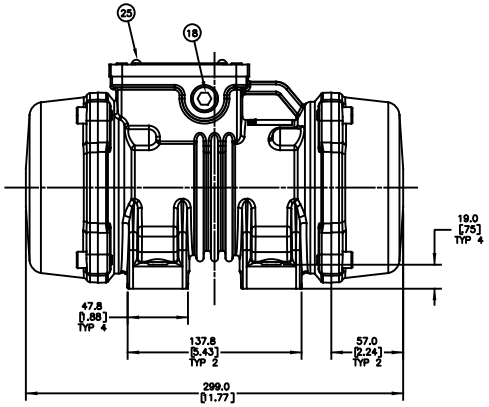

P/N MHF10UC02-S-0
SHOW IN BACK VIEW, LEFT VIEW, AND TOP VIEW

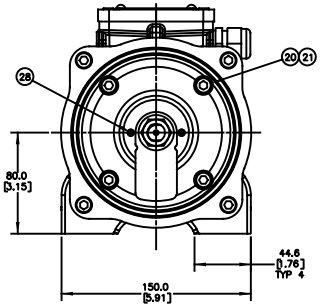

WEIGHT COVER AND WEIGHTS
REMOVED FOR CLARITY

NOTES:
1) ALL DIMENSIONS ARE GIVEN IN MILLIMETERS [INCHES].
2) ALL DIMENSIONS ARE FOR REFERENCE ONLY.
3) IN THE PART NUMBER THE MHF INDICATES A MARTIN HIGH FREQUENCY STYLE VIBRATOR WITH NM MOUNTING HOLE PATTERN.
   THE 10 INDICATES A 10 FRAME VIBRATOR.
   THE UC INDICATES THE VOLTAGE/HERTZ:
   UC = 120 VOLTS 60 HZ
   THE 02 INDICATES A 2 POLE VIBRATOR.
   THE FIRST -X INDICATES SPEED:
   -S = STANDARD SPEED
   -V = VARIABLE SPEED
   THE LAST -X INDICATES IF IT COMES WITH A WEDGE:
   -W = WITH WEDGE
   -0 (ZERO) = WITHOUT WEDGE.
4) MOUNTING SURFACE OF EQUIPMENT FOR VIBRATOR IS TO BE FLAT WITHIN .5MM [.02] AND MUST BE RIGID.
5) OVERLOAD PROTECTION REQUIRED. REFER TO NATIONAL ELECTRICAL CODE ARTICLE 430 OR CONTACT MARTIN ENGINEERING.
6) WEIGHT: SEE CHART.

MANUFACTURING NOTES:
1) REFER TO WIRING DIAGRAM (P/N 518213) FOR WIRING OF STATOR WIRES AND LEAD WIRES TO THE TERMINAL BLOCK. REFERENCE "TERMINAL BLOCK HARDWARE DETAIL".
2) FOLD AND PLACE WIRING DIAGRAM INSIDE THE TERMINAL BOX.
3) ASSEMBLE ECCENTRIC WEIGHTS PER THE WEIGHT DETAIL. STANDARD WEIGHT SETTING:
   (11 WEIGHTS DOWN, 2 WEIGHTS UP)
4) STANDARD PAINT SCHEME:
   CASE: BLACK (PREPAINTED).
   BEARING FLANGES: BLACK (PREPAINTED).
   WEIGHT COVERS: MARTIN ORANGE (PREPAINTED).
   TERMINAL BOX COVER: MARTIN ORANGE (PREPAINTED).

A

NAMEPLATE STAMPING DETAIL

PART NUMBER	TYPE	SERIES	FORCE-LBS	RPM	HZ	VOLT	AMP	PH	KW IN	HP	DUTY	DIAGRAM	LR CODE	CAP uF	INS CLASS	MAX AMB	IP
MHF10UC02-X-X	MHF-1500		1500	6000	60-100HZ	230	1.59	3	.21	.25	CONT	2A	P		F	40°C	IP66

NO.	DESCRIPTION	ECN	DATE	BY
B	ROUTED P/N'S MHF10UC02-V-0 AND MHF10UC02-V-W AND ADDED TO DWMT. (PR14646)	----	04/04/24	JLD
A	IN "NAMEPLATE STAMPING DETAIL" CHART – CHGD "PH" FROM 1 TO 3	16397	08/13/23	MJB

SOLIDWORKS REVISION

© Copyright 2023 Martin Engineering. All rights reserved. Covered by U.S. and foreign patents pending and issued. © and TM indicate trademarks of Martin Engineering.

MARTIN ENGINEERING
NEPONSET, IL USA

TITLE: MHF-1500 120V 60 HZ 1 PH 2 POLE 10 FR STD OR VARIABLE SPEED W/ OR W/O WEDGE

DRAWING NUMBER: PR14470 — MHF10UC02-X-X

DRAWN	JLD	DATE 03/24/23
CHECKED		
ENG.	JAH	DATE 05/05/23
I.E.	BJB	DATE 05/08/23
APPROVED	JJM	DATE 05/08/23
SCALE	1:2	

This drawing is the confidential information of Martin Engineering Company and cannot be shared with any third party without Martin Engineering Company's express prior written consent.