Martin® QC1™ Cleaner XHD STS™

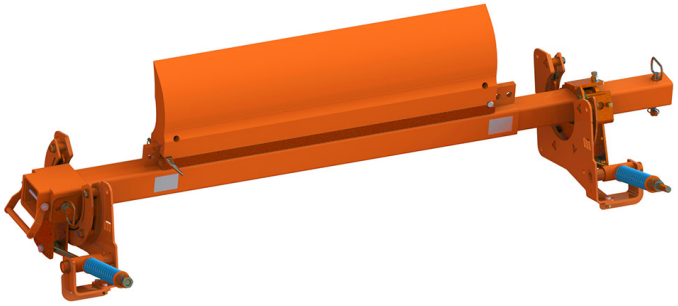

The Martin® QC1™ Cleaner XHD STS™ tackles the tough jobs. Designed for rugged conditions, this sturdy cleaner's stainless steel mandrel allows the blade cartridge to be serviced without confined space entry or breaking the safety plane. Changing the blade is a simple one-pin operation, making replacement of a worn blade a safe and simple procedure.

The Martin® QC1™ Cleaner XHD STS™ includes a Martin® Spring Tensioner XHD STS™ to maintain proper cleaning pressure while minimizing the need for adjustment.

NOMENCLATURE

STSXHDQC- XX XX XX XX X

P/N Prefix
Belt Width (inches)
Solid/Segmented
Blade Width (inches)
Urethane Color
Tensioner and Mandrel Tube

BELT WIDTH
00: No Blade

SOLID/SEGMENTED
00: No Blade
11: Solid Blade with Slots
10: Segmented Blade with Slots

TENSIONER
T: Spring Tensioner
A: Air Tensioner
Blank: No Tensioner or Mandrel Tube

URETHANE COLOR
00: No Blade
BR: Brown
CL: Tan
GR: Green
NB: Navy Blue
CY: Yellow with Beads
Blank: Orange

FREQUENTLY ASKED QUESTIONS

My Pre-Cleaner keeps flipping through. What is wrong?
The mounting location may be too far away from the belt. Relocate to the proper mounting location. Replace the mainframe or end weldments if they are bent. Check set screws to determine if they are tight. Retighten if necessary.

My Pre-Cleaner is wearing more in the center of the blade.
The blade is too wide for this application. Replace with a shorter length blade.

BENEFITS

- **Safe To Service**
  The blade can be replaced from outside the chute wall or the conveyor structure without breaking the safety plane.
- **Fast Blade Change Cuts Service Expense**
  One-pin blade replacement makes blade replacement a fast and easy operation.
- **Matched Tensioner Maintains Consistent Cleaning**
  Martin® QC1™ Cleaner XHD STS™ and Martin® Spring Tensioner XHD STS™ are system-engineered to preserve the cleaning edge from high belt speeds and multiple splices.
- **Curved Blade Provides Consistent Cleaning**
  Patented "CARP" (Constant Angle Radial Pressure) design maintains cleaning performance through all stages of blade life.
- **Rugged Construction Suits Tough Conditions**
  Mainframe of rugged 3/8-in. (9.5-mm) thick DOM steel tubing has steel bar backbone. Aluminum extrusion in blade base holds cleaner snugly to backbone.
- **Blade Materials Match Application**
  Martin Engineering's urethane expertise provides blades to suit standard, high-temperature, or high-abrasion conditions.
- **The Most Cleaner, the Least Investment**
  Economical pre-cleaner and tensioner system combines effective cleaning, durable life, and low-maintenance requirements.

NOTES

Normal blade length is belt width less 6 in. (150 mm). For belts with a 45° trough or where material is centered on belt, customer should consider a blade that is belt width less 12 in. (300 mm). This is because belt edges may not require cleaning, and blade-to-belt friction in these areas may lead to premature wear of cleaner and/or belt.

Form No. L3997-06/23
© Martin Engineering Company 2014, 2023

TECHNICAL DATA SHEET

SPECIFICATIONS & DIMENSIONS – in. (mm)

Part Number	Belt Width in (mm)	Dim. A Blade in (mm)	Dim. B Mainframe in (mm)	Dim. C Mandrel in (mm)
Part Number STSXHDQC-XXXXXXXXX (belt width less 6 in.)				
STSXHDQC-24XX18XXX	24 (600)	18 (457)	36.91 (938)	56.50 (1435)
STSXHDQC-30XX24XXX	30 (750)	24 (610)	42.91 (1090)	62.50 (1588)
STSXHDQC-36XX30XXX	36 (900)	30 (762)	48.91 (1242)	68.50 (1740)
STSXHDQC-42XX36XXX	42 (1050)	36 (915)	54.91 (1395)	74.50 (1892)
STSXHDQC-48XX42XXX	48 (1200)	42 (1067)	60.91 (1547)	80.50 (2045)
STSXHDQC-54XX48XXX	54 (1350)	48 (1219)	66.91 (1700)	86.50 (2197)
STSXHDQC-60XX54XXX	60 (1500)	54 (1372)	72.91 (1852)	92.50 (2350)
STSXHDQC-66XX60XXX	66 (1650)	60 (1524)	78.91 (2004)	98.50 (2502)
STSXHDQC-72XX66XXX*	72 (1800)	66 (1676)	84.91 (2157)	104.50 (2654)
STSXHDQC-78XX72XXX*	78 (2000)	72 (1829)	90.91 (2309)	110.50 (2807)
Part Number STSXHDQC-XXXXXXXXX (belt width less 12 in.)				
STSXHDQC-24XX12XXX	24 (600)	12 (305)	36.91 (938)	56.50 (1435)
STSXHDQC-30XX18XXX	30 (750)	18 (457)	42.91 (1090)	62.50 (1588)
STSXHDQC-36XX24XXX	36 (900)	24 (610)	48.91 (1242)	68.50 (1740)
STSXHDQC-42XX30XXX	42 (1050)	30 (762)	54.91 (1395)	74.50 (1892)
STSXHDQC-48XX36XXX	48 (1200)	36 (915)	60.91 (1547)	80.50 (2045)
STSXHDQC-54XX42XXX	54 (1350)	42 (1067)	66.91 (1700)	86.50 (2197)
STSXHDQC-60XX48XXX	60 (1500)	48 (1219)	72.91 (1852)	92.50 (2350)
STSXHDQC-66XX54XXX	66 (1650)	54 (1372)	78.91 (2004)	98.50 (2502)
STSXHDQC-72XX60XXX	72 (1800)	60 (1524)	84.91 (2157)	104.50 (2654)
STSXHDQC-78XX66XXX*	78 (2000)	66 (1676)	90.91 (2309)	110.50 (2807)

*Available for -XX10XXCYX Only

MARTIN® QC1™ CLEANER XHD STS™, P/N STSXHDQC-XXXXXXXXX

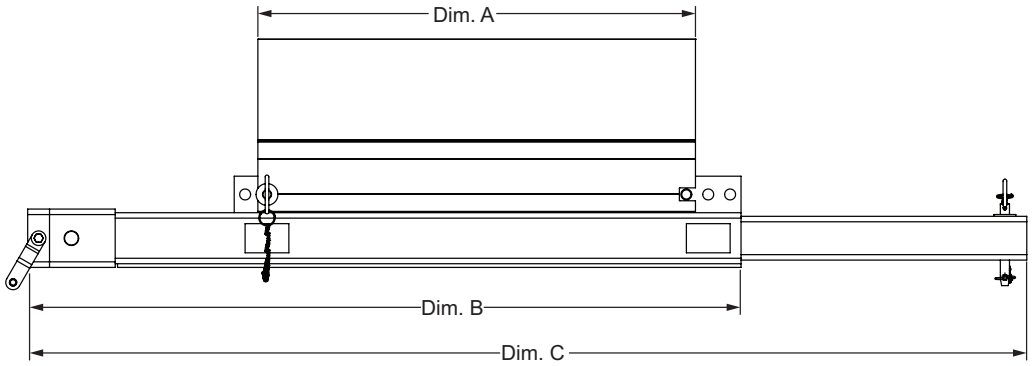

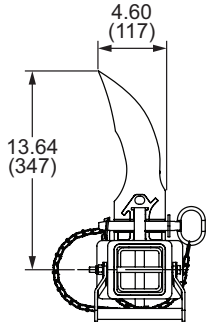

REPLACEMENT BLADE NOMENCLATURE

C1QCEBS- XX S X X X

P/N Prefix
Belt Width (inches)
Blade Coverage
Blade Color
Solid/Segmented

BLADE COLOR
B: Brown
G: Green
N: Navy Blue
O: Orange
T: Tan
C: Yellow with Ceramic Beads

BLADE COVERAGE
6: 6” Less Belt Width
C: 12” Less Belt Width

SOLID/SEGMENTED
2: segmented blade with slots
3: solid blade with slots

Form No. L3997-06/23
© Martin Engineering Company 2014, 2023

INSTALLATION AND MOUNTING

Installation Recommendations:

Head Pulley Diameter	24 in. – 30 in. (609.6 – 762 mm)
Maximum Belt Speed	1200 fpm (6 m/s)

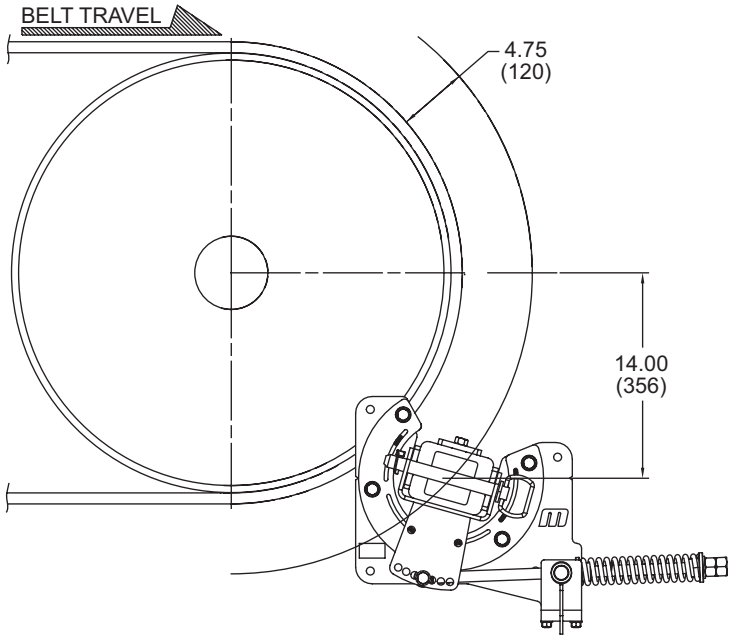

MARTIN® SPRING TENSIONER XHD STS™, P/N 39100-XHDSXSQ

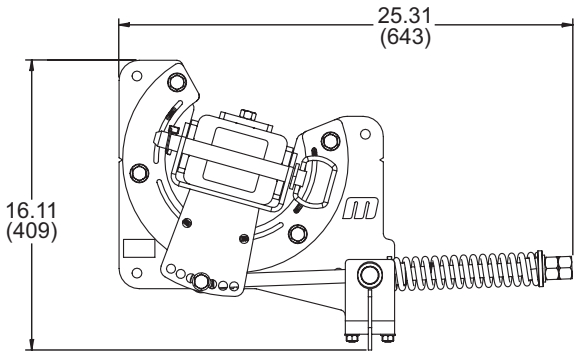

Operator Side

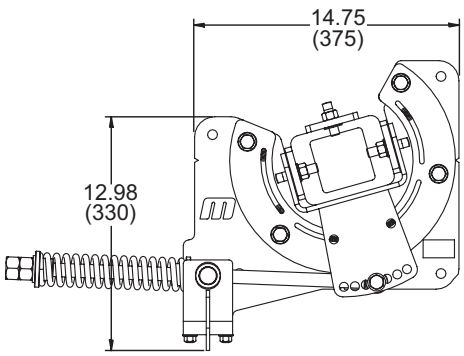

Far Side

MARTIN® AIR TENSIONER XHD STS™, P/N 39100-XHDASQ

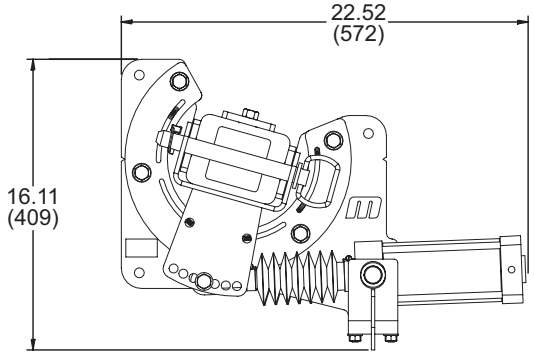

Operator Side

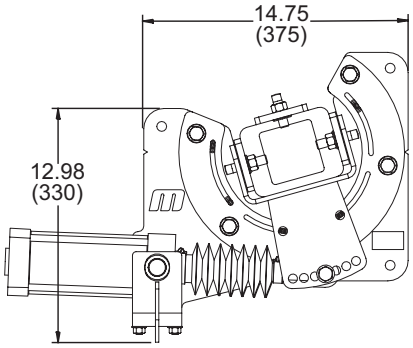

Far Side

Martin Engineering USA
One Martin Place
Neponset, IL 61345-9766 USA
800 544 2947 or 309 852 2384
Fax 800 814 1553
www.martin-eng.com

COMPANY WITH QUALITY SYSTEM CERTIFIED BY DNV GL = ISO 9001 =

Form No. L3997-06/23
© Martin Engineering Company 2014, 2023