Martin® Impacting Railcar Opener

Operator's Manual
M4123

Important

MARTIN ENGINEERING HEREBY DISCLAIMS ANY LIABILITY FOR: DAMAGE DUE TO CONTAMINATION OF THE MATERIAL; USER'S FAILURE TO INSPECT, MAINTAIN AND TAKE REASONABLE CARE OF THE EQUIPMENT; INJURIES OR DAMAGE RESULTING FROM USE OR APPLICATION OF THIS PRODUCT CONTRARY TO INSTRUCTIONS AND SPECIFICATIONS CONTAINED HEREIN. MARTIN ENGINEERING'S LIABILITY SHALL BE LIMITED TO REPAIR OR REPLACEMENT OF EQUIPMENT SHOWN TO BE DEFECTIVE.

Observe all safety rules given herein along with owner and Government standards and regulations. Know and understand lockout/tagout procedures as defined by American National Standards Institute (ANSI) z244.1-1982, *American National Standard for Personnel Protection - Lockout/Tagout of Energy Sources - Minimum Safety Requirements* and Occupational Safety and Health Administration (OSHA) Federal Register, Part IV, 29 CFR Part 1910, *Control of Hazardous Energy Source (Lockout/Tagout); Final Rule*.

The following symbols may be used in this manual:

⚠ DANGER

Danger: Immediate hazards that will result in severe personal injury or death.

⚠ WARNING

Warning: Hazards or unsafe practices that could result in personal injury.

⚠ CAUTION

Caution: Hazards or unsafe practices that could result in product or property damages.

IMPORTANT

Important: Instructions that must be followed to ensure proper installation/operation of equipment.

NOTE

Note: General statements to assist the reader.

Table of Contents

List of Figures

List of Tables

Introduction

General

The Martin® Impacting Railcar Opener is an air-powered impact wrench that opens the most stubborn hopper gates. Railcar opener specifications are provided in Table I.

Table I. Martin® Impacting Railcar Opener Specifications

Air supply	90 psi @ 130 cfm (6.21 bar) @ 61.4 l/s
Output force at 90 psi (5.86 bar)	up to 10,000 ft-lbs (1382 kg-m)

References

The following documents are referenced in this manual:

- American National Standards Institute (ANSI) z244.1-1982, *American National Standard for Personnel Protection - Lockout/Tagout of Energy Sources - Minimum Safety Requirements*, American National Standards Institute, Inc., 1430 Broadway, New York, NY 10018.
- Federal Register, Volume 54, Number 169, Part IV, 29 CFR Part 1910, *Control of Hazardous Energy Source (Lockout/Tagout); Final Rule*, Department of Labor, Occupational Safety and Health Administration (OSHA), 32nd Floor, Room 3244, 230 South Dearborn Street, Chicago, IL 60604.

Safety

All safety rules herein and all owner/employer safety rules must be strictly followed when working on this equipment.

Materials Required

Only standard hand tools are required to install and service this equipment.

Before Assembling Railcar Opener

IMPORTANT

The delivery service is responsible for damage occurring in transit. Martin Engineering CANNOT enter claims for damages. Contact your transportation agent for more information.

1. Inspect shipping container for damage. Report damage to delivery service immediately and fill out delivery service's claim form. Keep any damaged goods subject to examination.
2. Remove railcar opener from shipping containers. Equipment in containers should include the following:
   - Martin® Impacting Railcar Opener
   - 1 qt. Martin® Air Tool Oil
   - Capstan Drive Adapter
   - 1 tube impacting tool grease
   - 1 grease gun

NOTE

The shipping container includes a pre-assembled Martin® Impacting Railcar Opener. Capstan extension will need to be attached to the railcar opener and lubricator will need to be filled with Martin® Air Tool Oil.

3. If anything is missing or damaged, contact Martin Engineering or a representative.

IMPORTANT

Read and understand all safety information.

Assembling Railcar Opener

Adjusting the handle

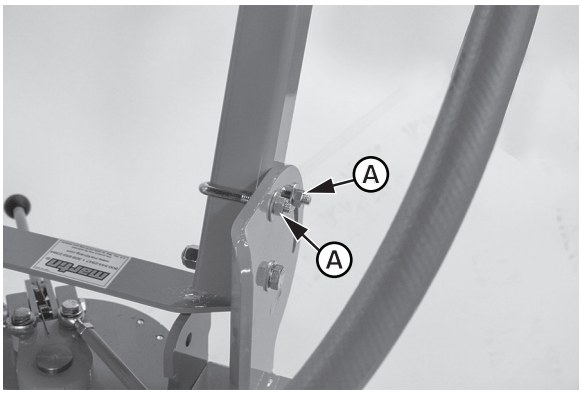

1. Loosen nuts (A) on u-bolts on each side to adjust angle position of handle.
2. Tighten nuts when handle is in desired position.

Attaching capstan drive adapter

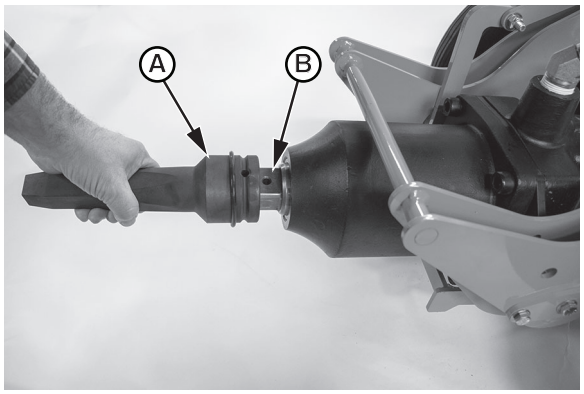

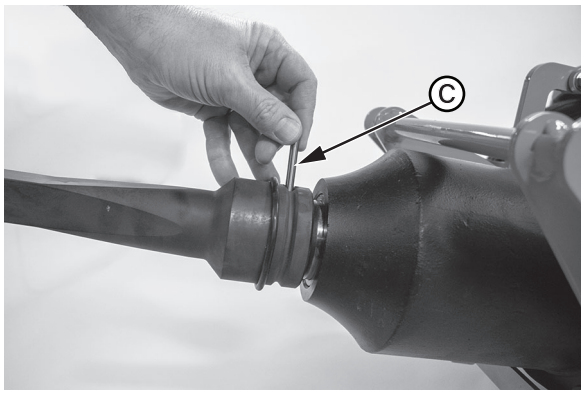

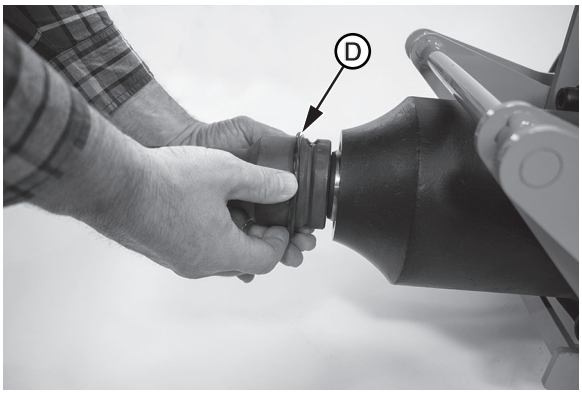

1. Align holes and install capstan drive adapter (A) onto square drive (B) of impact motor.
2. Slide pin (C) into hole on capstan drive adapter and through hole in square drive of impact motor.
3. Seat o-ring (D) into groove to hold pin in place.

Preparing the Filter, Regulator, and Lubricator

NOTE

Air supply must be filtered, regulated, and lubricated for proper air motor operation. Customer must supply filtered and regulated (90 psi) air.

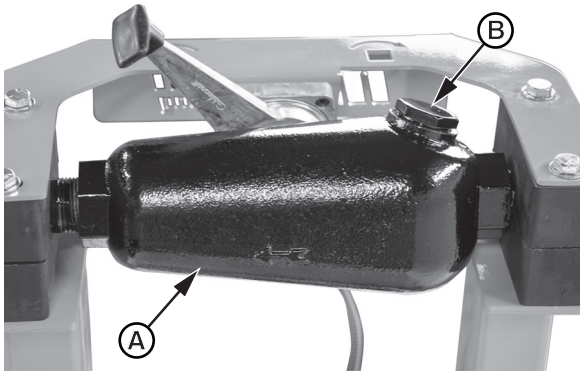

The Martin® Impacting Railcar Opener is supplied with a lubricator (A). Open fill port (B) and verify that lubricator is full prior to use. Verify that oil is being delivered to the motor (oil mist at exhaust should be evident)

NOTE

Oil delivery rate is recommended to be set at "5" on the dial inside the lubricator.

Martin Engineering recommends the use of Air Motor Oil (P/N 14766) when servicing the lubricator.

Attaching hose to plant air supply

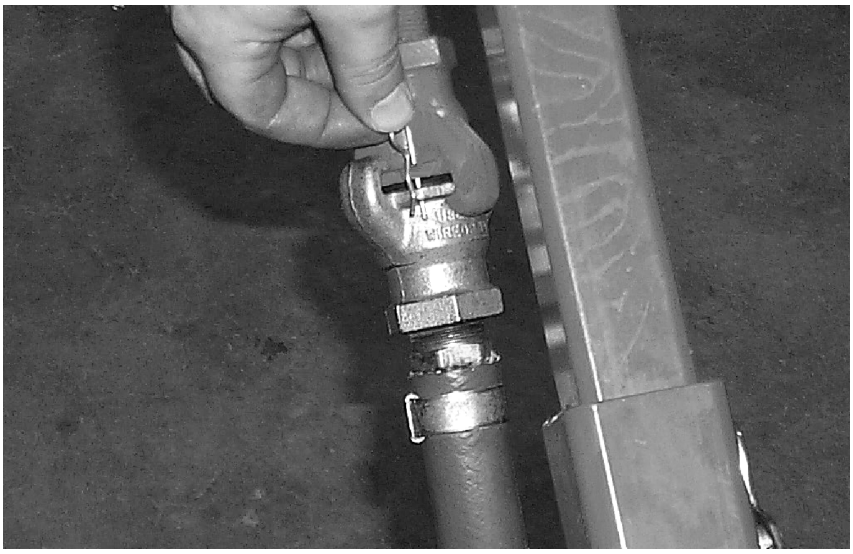

⚠WARNING

Pins must be inserted to prevent hoses from coming apart.

1. Connect plant air supply to Martin® Impacting Railcar Opener using 1 in. hose or larger for air supply.

Operating Railcar Opener

Opening and closing railcar gate

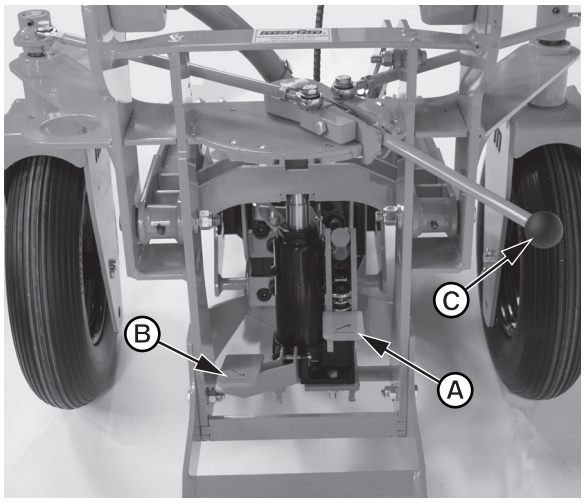

1. Position railcar opener near railcar gate's capstan socket.
2. Adjust height of capstan drive adapter using foot jack (A) to raise or (B) to lower adapter.
3. Engage capstan drive adapter into railcar gate's capstan socket. Make sure adapter is firmly seated and fully engaged in capstan socket.
4. For railcars with rolling capstans, move lever (C) to rotate wheels 90 degrees.

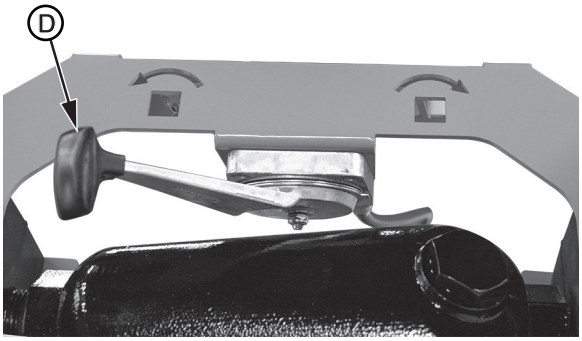

5. Turn lever (D) to set rotation direction of drive shaft.

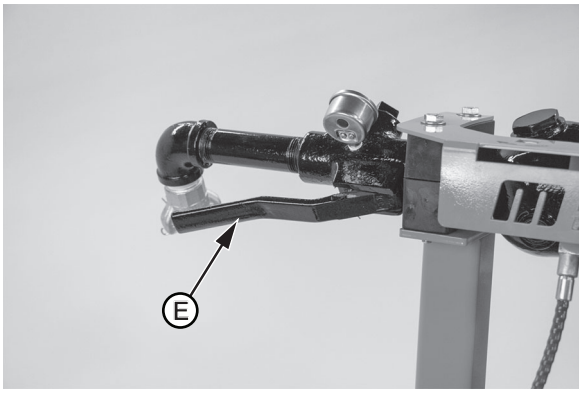

6. Firmly hold both railcar opener's handles and fully depress throttle valve (E).
7. Release throttle valve as soon as railcar gate reaches the end of its track.
8. For railcars with rolling capstans, move lever (C) to rotate wheels 90 degrees.
9. Roll railcar opener away from railcar to disengage capstan drive adapter from railcar capstan socket.

Maintenance

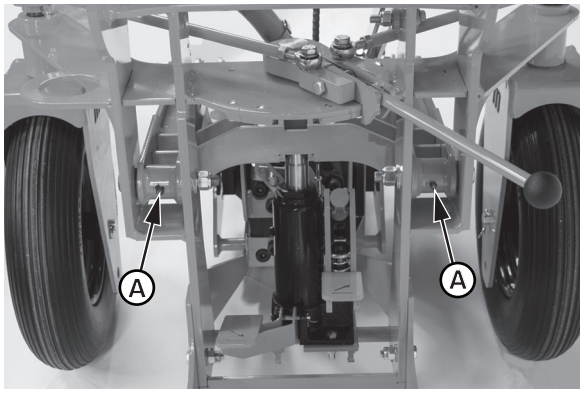

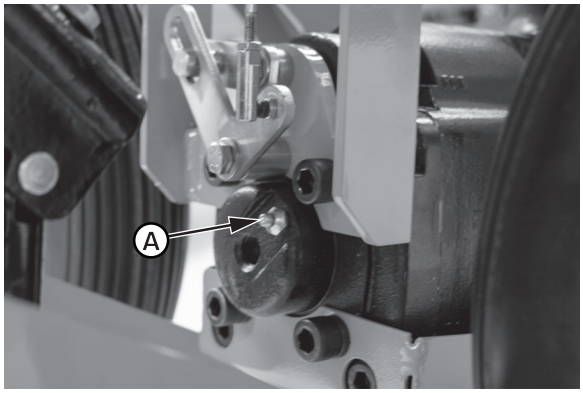

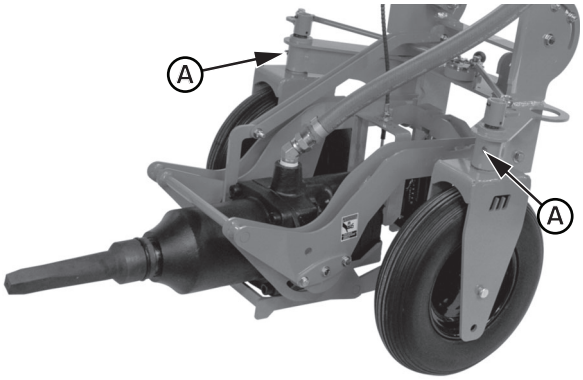

Weekly maintenance

1. Fill lubricator and verify that oil is being delivered to motor.
2. Inspect all hardware and tighten if necessary.
3. Wipe all labels clean. If labels are not readable, contact Martin Engineering or a representative for replacements.

Monthly maintenance

1. Grease pivot points.
   a. Clean area around grease fittings (A) with clean shop towel.
   b. Insert grease gun onto grease fitting and add grease.

Every 500 gates

IMPORTANT

Motor to be greased only with Klubersynth GE14-151. Use of any other grease will void warranty.

1. Grease motor with 15 pumps (.3 oz) every 500 gate cycles. Open to close equals one cycle.

Troubleshooting

Symptom	Corrective Action
Railcar opener will not operate.	• Insufficient air pressure and/or cfm. Check main source. Check regulator setting. • Ensure that the directional control lever/valve is fully engaged in desired direction.
Opener will not open gates or takes longer than normal.	• Make sure that the gate is square in the rack. If crooked, run the gate opener in the opposite direction and attempt to get the gate square. If the gate will not return to square, contact the car owner for instructions.

Part Numbers

This section provides product names and corresponding part numbers for the Martin® Impacting Railcar Opener and related equipment. Please reference part numbers when ordering parts:

Martin® Impacting Railcar Opener Assembly

Martin® Impacting Railcar Opener Assembly, P/N RO10080. See Figure 1.

Martin® Grease, P/N 30559-23L.

Martin® Air Motor Oil (qt), P/N 14766

Loud Noise Warning Label, P/N 34070. See Figure 2.

Martin Product Label, P/N 32238-01.

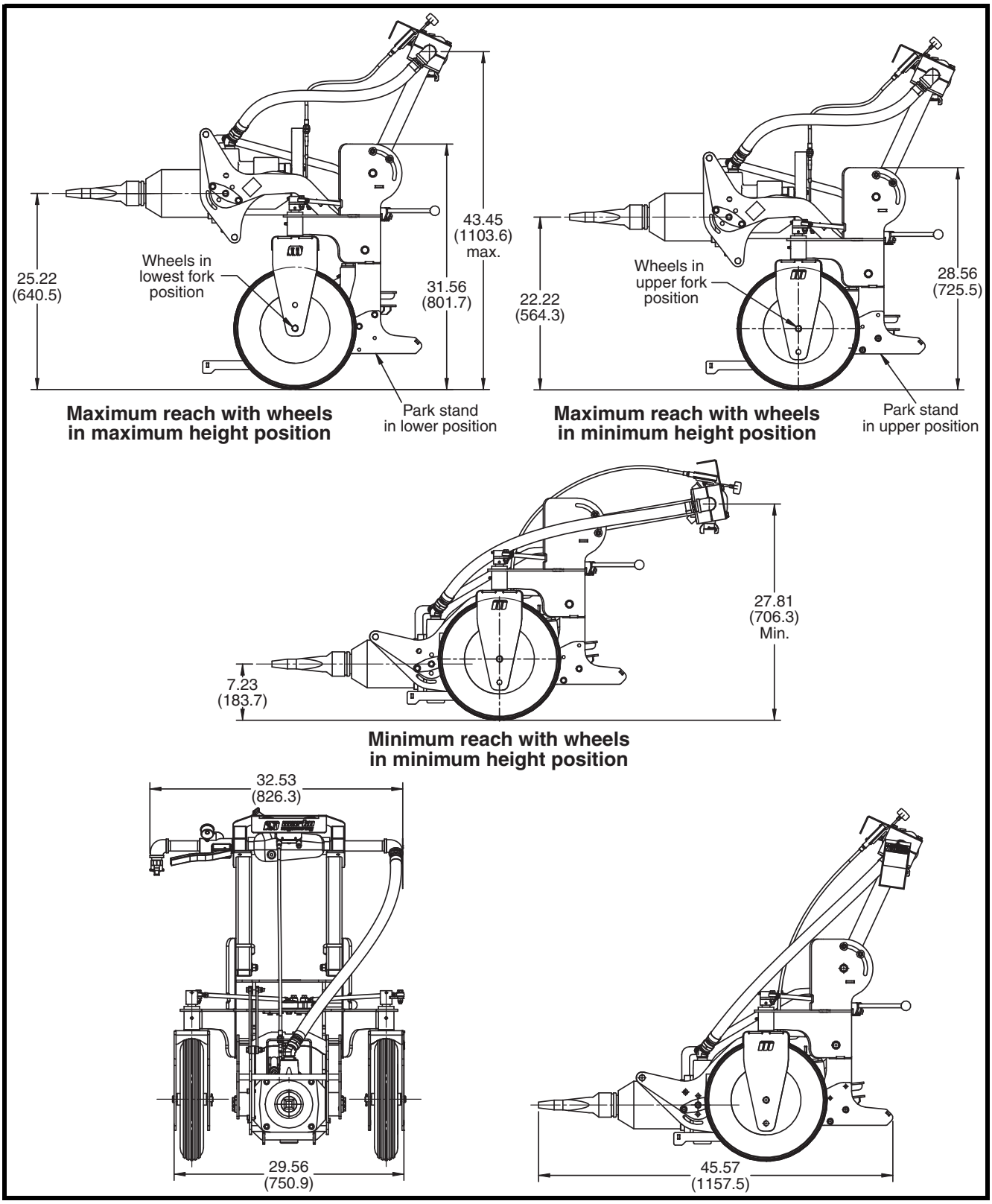

Figure 1. Martin® Impacting Railcar Opener Dimensions

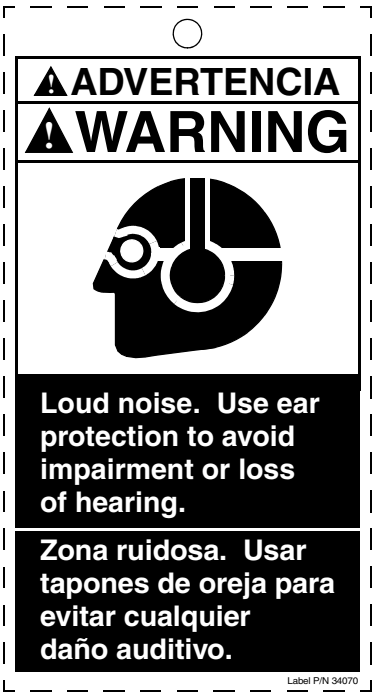

Figure 2. Loud Noise Warning Tag, P/N 34070

Problem Solved™ GUARANTEED!

For nearly 30 years, Martin Engineering's Foundations™ Books have taught industry personnel to operate and maintain clean and safe belt conveyors. The Foundations™ Book, fourth edition, focuses on improving belt conveyors by controlling fugitive material. "The Practical Resource for Total Dust and Material Control," is a 576-page hard cover volume that provides information of value to industries where the efficient handling of bulk materials is a key to productivity and profitability.

Expanding upon the book, our Foundations™ Training Program addresses the design and development of more productive belt conveyors, and is offered in three customizable seminars. Attendees gain a better understanding of conveyor safety and performance, helping to justify upgrade investments and increase profitability.

Martin Engineering Australia Pty Ltd.
20 Ern Harley Dr - Burleigh Heads, QLD, 4220 - Australia
1300 627 364
www.martin-eng.com.au

Form No. M4123-03/20