Martin® External Wear Liner

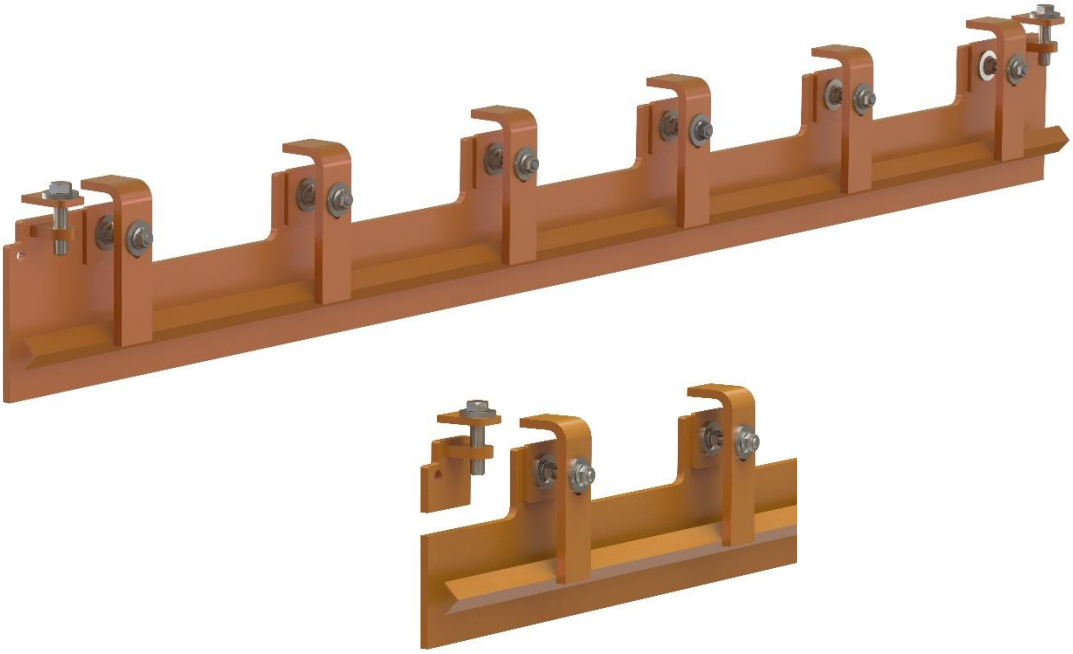

Operating Instructions

Version: 0
Language: ENG
M3801E UK 2023-12 EXTERNAL WEAR LINER

Table of Contents

1 General 2

1.1 About these operating instructions 2

1.2 Intended usage 2

1.3 Personnel qualification 3

1.4 Part number 4

1.5 Technical Data 5

2 Safety 6

2.1 General safety instructions 6

2.2 Personal protective equipment 8

2.3 Safety markings on the system 8

3 Before Installation 9

3.1 Unpacking/transportation 9

3.2 Required maximum of tools and materials 9

4 Installation 10

4.1 Determining the installation position 10

4.2 Positioning the Wear Liner 11

4.3 Mounting the Wear Liner 12

4.4 Placing labels 13

5 Maintenance / Repair 14

6 Disassembly / Recycling / Disposal 15

7 Scope of delivery and spare parts 16

1 General

NOTE

Before starting work these operating instructions must be read and understood completely.

1.1 About these operating instructions

These operating instructions apply solely for Wear Liner and are intended for those persons who install Wear Liners, commission them, and monitor their usage.

The operating instructions must be kept for the lifetime of the Wear Liner and must be made available in an orderly condition to all persons entrusted with work with and on the Wear Liner.

1.2 Intended usage

The Wear Liners are used on the fixed enclosures of the closed loading areas of belt conveyors. They are used for sealing against the surface of smooth conveyor belts.

They may only be used

- in industrial areas above ground
- at a sufficiently safe distance from danger points
- according to the technical data in the documentation
- in the installation position as described in the documentation

The usage of the Wear Liner is only considered to be as intended if the following conditions are also fulfilled:

- Before starting initial work, the personnel must have been instructed on the work on the system and on all relevant issues of occupational health and safety.
- Any personal protective equipment required must be worn.
- The provisions of the operating instructions must be observed in full.

The Wear Liners are not suitable,

- to hold back ejected objects, especially machine parts, conveyor belts or bulk material,
- to hold back released energy from explosions or divert it in a safe direction, or
- to retain hazardous substances, noise, or radiation.
- to be used potentially explosive areas of ATEX Zones 0, 1, 2 and 20 as well as underground, as they are not designed for this purpose.

Operation of the Wear Liner under deviating conditions and unauthorised modification of the Wear Liners is considered as improper usage.

Special product variants of the Wear Liner can also be used in ATEX zones 22 and 21 under certain circumstances.

1.3 Personnel qualification

Only authorised and qualified personnel may be entrusted with work with and on the Wear Liner Persons are considered qualified if they have the qualification of a skilled worker and meet all the following requirements:

- completed professional training or at least 5 years of professional experience in the field,
- technical experience,
- knowledge of the relevant occupational health and safety regulations.

The persons must

- be able to assess the tasks and risks assigned to them,
- be able to recognise potential dangers in advance,
- be physically and cognitively able to operate the conveyors and Wear Liner safely,
- have been trained and instructed appropriately,
- have read and understood these operating instructions.

Work on earth connections (Protective Bonding Kits), cabling, switching, control, regulation, automation, and all electrical components may be carried out only by trained electricians.

1.4 Part number

Martin® External Wear Liner **41778-AA B CC D**

Wear Liner Length in dm
500 mm (05) / 1.000 mm (10) / 2.000 mm (20)

Wear Liner Material
Hardox 500 painted RAL 2004 (5) / Stainless Steel 1.4571 (S)

Material Thickness in mm
10 mm (10)

ApronSeal™ Clamp
With Standard Clamp (S) / without clamp (0)

Martin® External Wear Liner Adapter Kit **41790-A BB C**

Wear Liner Material
Hardox 500 painted RAL 2004 (5) / Stainless Steel 1.4571 (S)

Material Thickness in mm
10 mm (10)

Side
Left (L) / Right (R) / not welded (0)

1.5 Technical Data

The Wear Liner is suitable for the following operating parameters:

	Operating parameter
Temperature range:	-30 – 150 °C
Reversing operation:	Yes
Troughing angle:	0° - 35°

2 Safety

2.1 General safety instructions

DANGER

Entanglement in moving or rotating parts

Body parts and/or clothing may get caught and pulled in by moving or rotating parts of the machinery.

- *Before any installation or maintenance work is carried out, ensure that all power sources to the conveyor belt system and its accessories are switched off and secured against inadvertent switching on.*
- *Apply Log-Out / Tag-Out / Try-Out (LOTOTO) Procedures*
- *Apply warning signs*

DANGER

Automatic start-up of the conveyor

Serious or fatal injuries due to unintentional start-up of the conveyor.

- *Switch off the conveyor before starting work and secure it against being switched on again.*
- *Follow safe procedures to prevent unintentional restart.*

WARNING

Flying objects

Objects left on or in the conveyor can fly around uncontrollably when the conveyor is switched on and can hit and injure persons.

- *Before switching on the conveyor, remove all foreign objects such as tools, devices, etc. from the belt!*

WARNING

Risk of falling down

Wear Liners are often mounted and operated in heights. There may be a risk of falling down.

- *Therefore, use a fall protection device when installing in higher working areas!*

WARNING

Working in confined spaces

Areas in which Wear Liners are installed are often difficult to access and include confined spaces. It is often necessary to work in difficult positions.

- *Determine whether occupational safety measures are necessary that go beyond the usual measures!*

2.2 Personal protective equipment

Persons carrying out work on Wear Liners must wear suitable personal protective equipment.

Minimum requirements:

Symbol	Meaning
	Wear head and eye protection
	Wear at least ankle-high foot protection
	Use gloves
	Use fall protection, if required

2.3 Safety markings on the system

The safety markings on the Wear Liner must be always kept in good condition and clearly visible.

If parts of the system are replaced, ensure that the spare parts are or will be provided with appropriate safety markings.

3 Before Installation

3.1 Unpacking/transportation

WARNING

Heavy weight

The Wear Liner may have weights that require handling by lifting devices. Handling Wear Liner by hand can cause serious skeletal injuries.

- *Use suitable aids if the load is > 25 kg per person!*
- *Identify the centre of gravity! Ensure that the Wear Liner cannot tilt during the lifting process!*

When unpacking, all components must be checked for completeness and intactness.

3.2 Required maximum of tools and materials

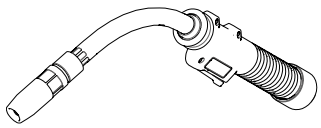	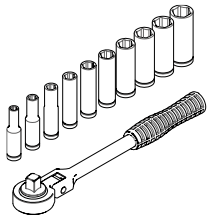	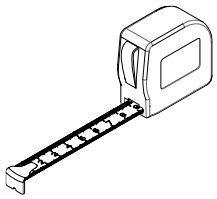

4 Installation

4.1 Determining the installation position

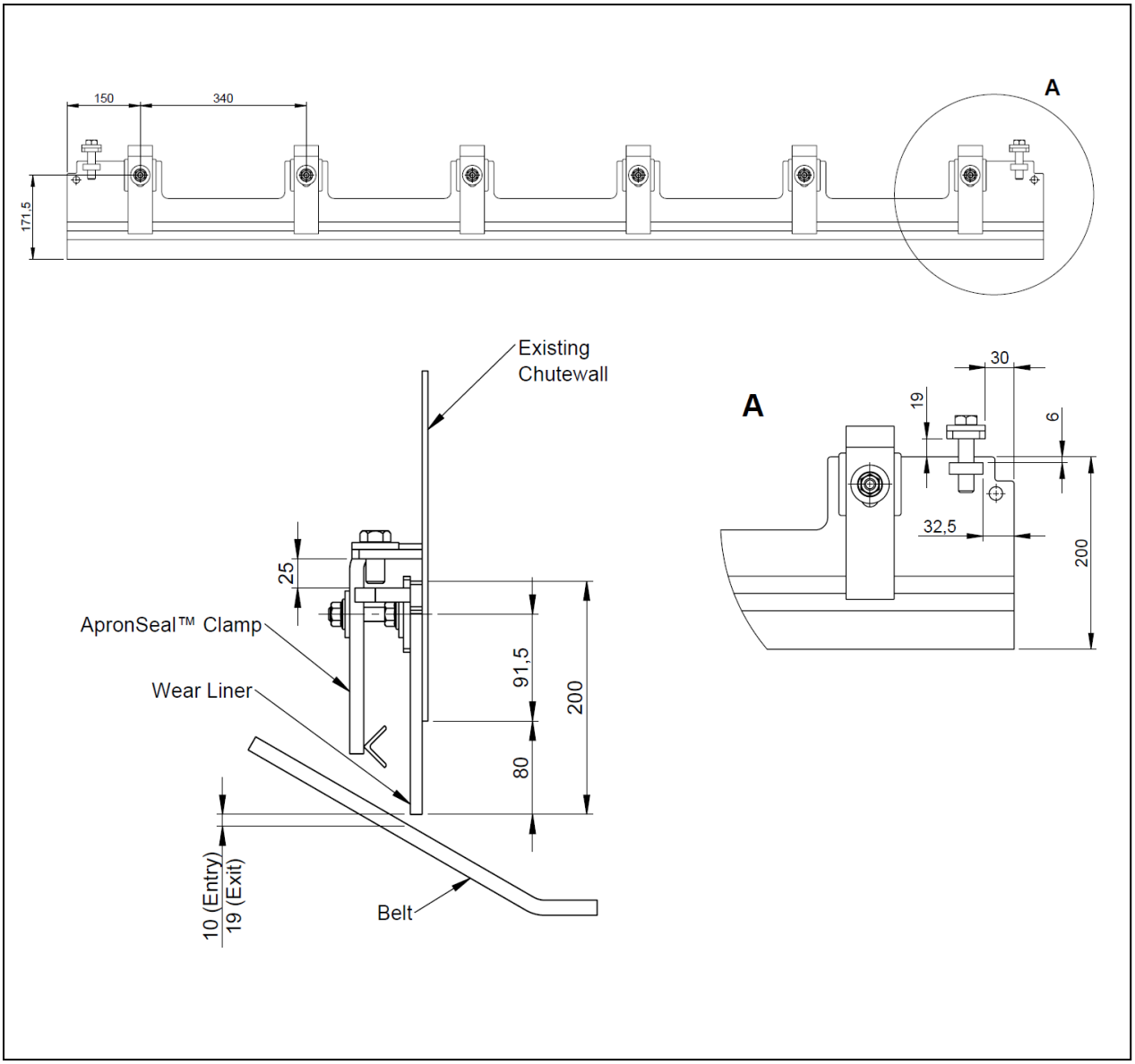

4.2 Positioning the Wear Liner

- In areas where Wear Liners and Side Sealings are installed it is particularly important that the conveyor belt is supported in such a way that the belt surface is flat.

- The gap between the belt surface and the bottom edge of the Wear Liner should be minimal and installed in a rising angle in belt running direction. In this way, chunks of material can free themselves through the movement of the belt and minimizes the risk of belt damage.

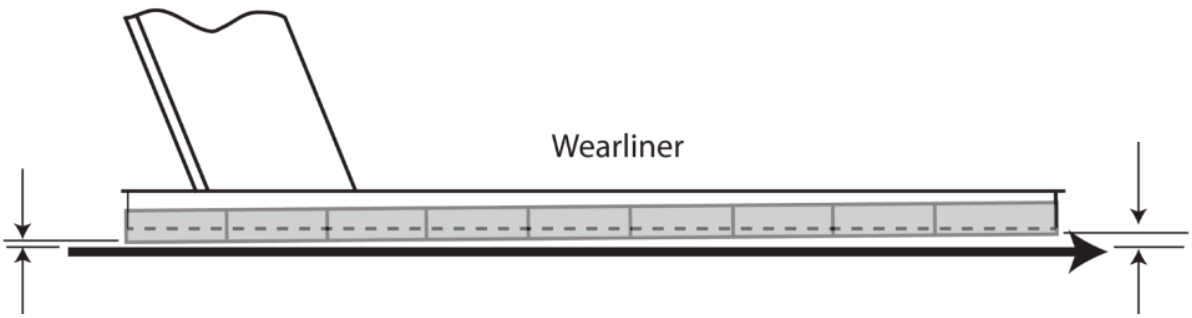

4.3 Mounting the Wear Liner

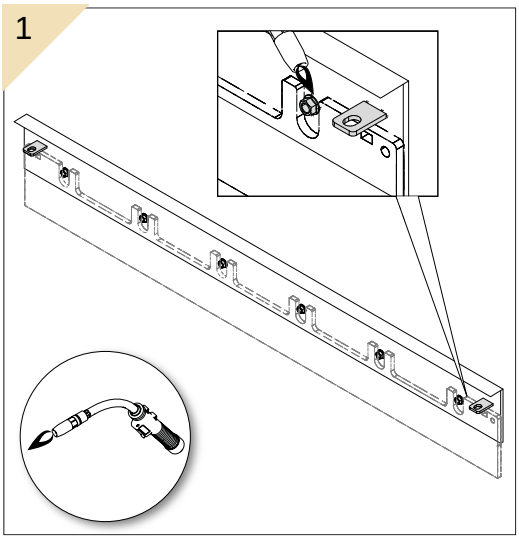

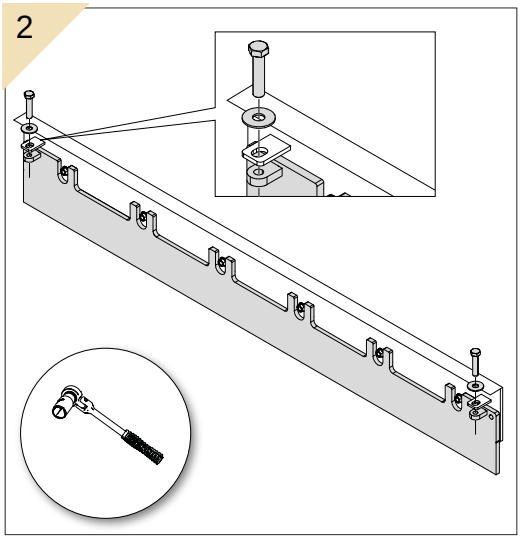

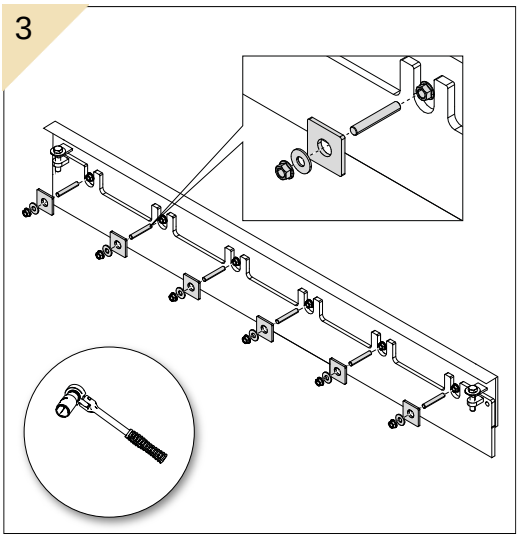

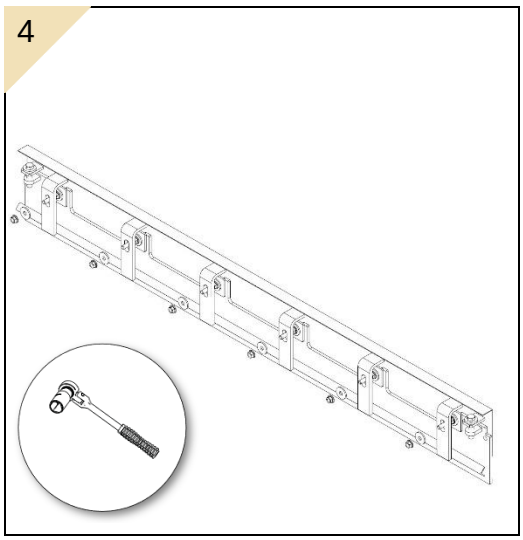

4.4 Placing labels

Safety label

The safety label below must be attached to the conveyor system in the immediate vicinity of the Wear Liner:

5 Maintenance / Repair

WARNING

Danger of injury due to unapproved component parts

Unapproved parts can directly or indirectly cause personal injury or damage to property.

– *Only use accessories and spare parts that are distributed by the manufacturer or are explicitly approved (in writing)!*

Interval	task
weekly	Check that all securing parts are tightened. Tighten any loose connections as required.
	Clean all warning labels. Replace any warning labels which are illegible.

NOTE

Remove equipment from service if there is any indication it is not functioning properly. Call Martin Engineering or representative for assistance. Do NOT return equipment to operation until the cause of the problem has been identified and corrected.

6 Disassembly / Recycling / Disposal

1. Disassemble Wear Liners by material groups as far as possible.
2. Contact official bodies (disposal centres, authorities) and request information about proper disposal or recycling possibilities.
3. Recycle the different materials.

Only materials that cannot be reasonably recycled may be disposed of. Disposal must be carried out professionally.

Material groups that can be fed into a recycling process include:

- Sheet steel
- Steel profiles
- Plastics
- Rubber
- Non-ferrous metals
- Electrical cables
- Electrical components (with copper content)
- Lubricants

7 Scope of delivery and spare parts

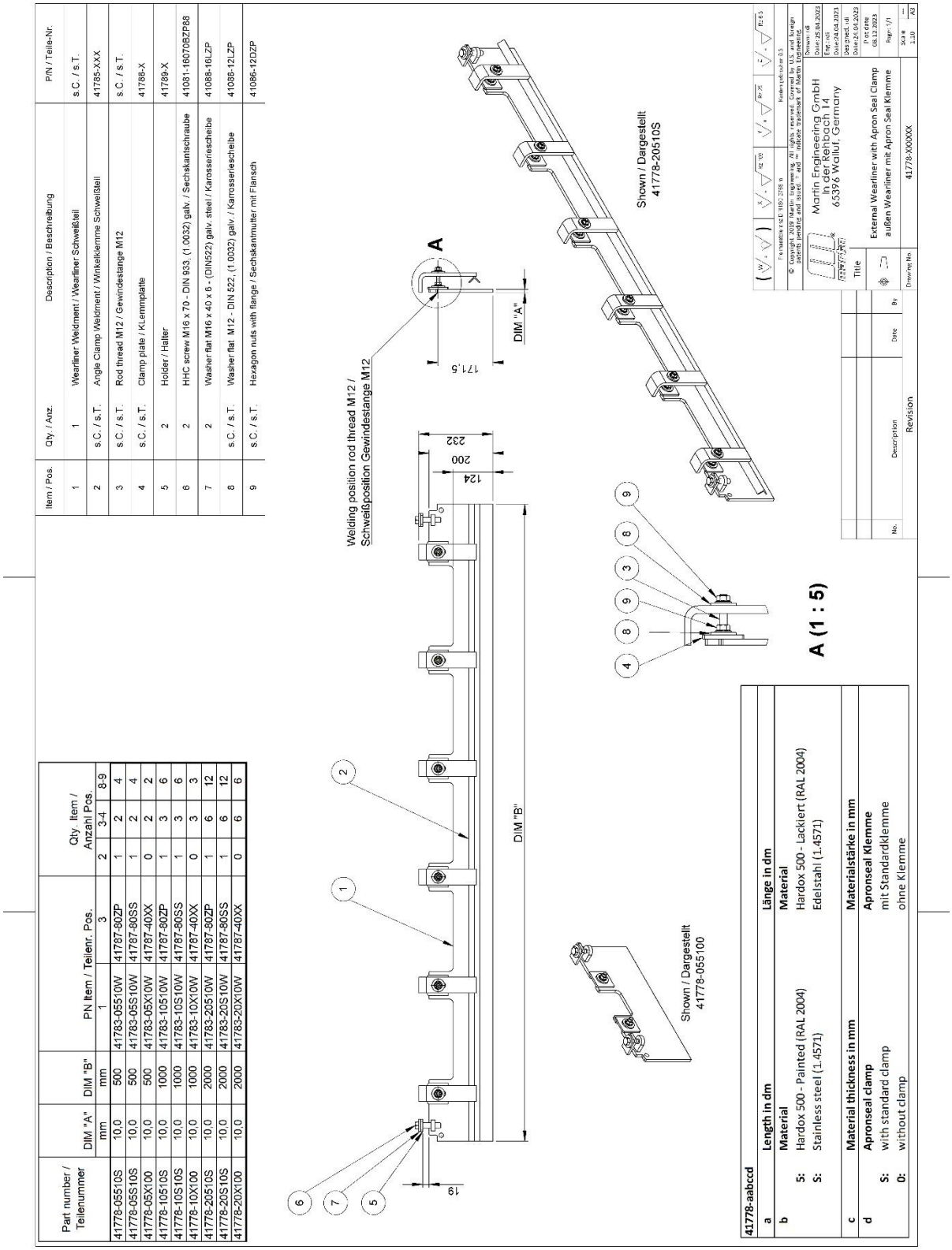

Part number / Teilenummer	DIM "A" mm	DIM "B" mm	P/N Item / Teilenr. Pos. 1	3	Qty. Item / Anzahl Pos. 2	3-4	8-9
41778-05510S	10,0	500	41783-05510W	41787-802P	1	2	4
41778-05S10S	10,0	500	41783-05S10W	41787-80SS	1	2	4
41778-05X100	10,0	500	41783-05X10W	41787-40XX	0	2	2
41778-10510S	10,0	1000	41783-10510W	41787-802P	1	3	6
41778-10S10S	10,0	1000	41783-10S10W	41787-80SS	1	3	6
41778-10X100	10,0	1000	41783-10X10W	41787-40XX	0	3	3
41778-20510S	10,0	2000	41783-20510W	41787-802P	1	6	12
41778-20S10S	10,0	2000	41783-20S10W	41787-80SS	1	6	12
41778-20X100	10,0	2000	41783-20X10W	41787-40XX	0	6	6

Item / Pos.	Qty. / Anz.	Description / Beschreibung	P/N / Teile-Nr.
1	1	Wearliner Weldment / Wearliner Schweißteil	s.C. / s.T.
2	s.C. / s.T.	Angle Clamp Weldment / Winkelklemme Schweißteil	41785-XXX
3	s.C. / s.T.	Rod thread M12 / Gewindestange M12	s.C. / s.T.
4	s.C. / s.T.	Clamp plate / KLemmplatte	41788-X
5	2	Holder / Halter	41789-X
6	2	HHC screw M16 x 70 - DIN 933, (1.0032) galv. / Sechskantschraube	41081-16070BZP88
7	2	Washer flat M16 x 40 x 5 - (DIN522) galv. steel / Karosseriescheibe	41088-16LZP
8	s.C. / s.T.	Washer flat M12 - DIN 522, (1.0032) galv. / Karosseriescheibe	41088-12LZP
9	s.C. / s.T.	Hexagon nuts with flange / Sechskantmutter mit Flansch	41086-12DZP

Part number / Teilenummer	DIM "A"
	mm
41790-XXXL	10,0
41790-XXXR	10,0
41790-XXX0	10,0

Item / Pos.	Qty. / Anz.	Description / Beschreibung	P/N / Teile-Nr.
1	1	External Wearliner Adapter Plate / außen Wearliner Adapterplatte	41791-XXX
2	1	External Wearliner Threaded Plate / außen Wearliner Gewindeplatte	41784-X
3	1	Holder / Halter	41789-X
4	1	Washer flat M16 x 40 x 6 - (DIN522) galv. steel / Karosseriescheibe	41088-16LZP
5	1	HHC screw M16 x 70 - DIN 931, (1.0032) galv. / Sechskantschraube	41081-16070AZP88

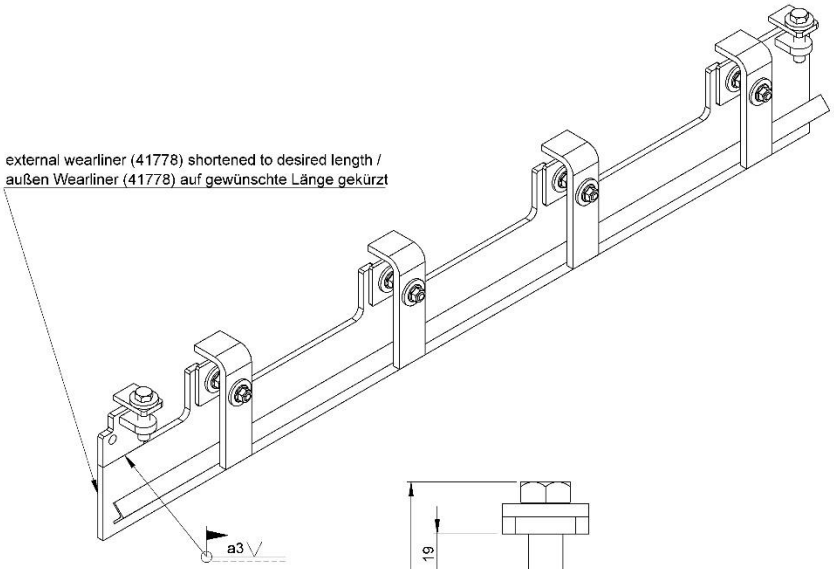

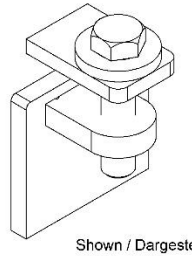

Shown / Dargestellt
41790-X10R

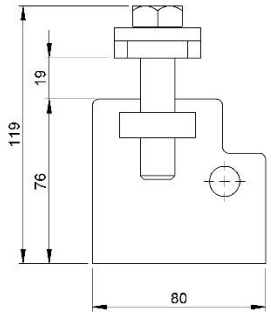

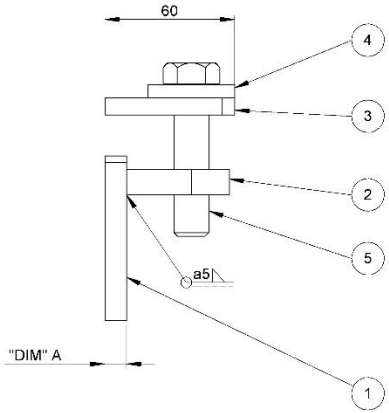

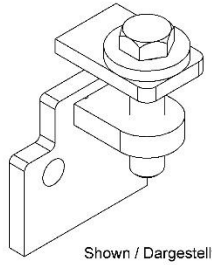

Shown / Dargestellt
41790-X10L

Notes:
1) All dimensions are given in mm
2) Deburr and break sharp edges
3) Painted: RAL 2004 (80-120 µm)

Bemerkung:
1) Alle Maße sind in mm
2) Entgraten und scharfe Kanten brechen
3) Lackiert: RAL 2004 (80-120 µm)

41790-abbc			
a		**Material**	
	5:	Hardox 500 - Painted (RAL 2004)	**Hardox 500 - Lackiert (RAL 2004)**
	S:	Stainless steel (1.4571)	Edelstahl (1.4571)
b		**Material thickness in mm**	Materialstärke in mm
c		**side**	**Seite**
	L:	left	links
	R:	right	rechts
	0:	not welded	nicht verschweißt

No.	Description	Date	By
	Revision		

Freimasse ersetzt DIN ISO 2768 m — Kanten gebrochen 0.3

© Copyright 2019 Martin Engineering. All rights reserved. Covered by U.S. and foreign patents, pending and issued. © and ™ indicate trademark of Martin Engineering.

Martin Engineering GmbH
In der Rehbach 14
65396 Walluf, Germany

Title: External Wearliner Adapter Kit / außen Wearliner Adapter Kit

Drawing No.: 41790-XXXX

Drawn: rdi Date: 02.05.2023
Eng.: rdi Date: 02.05.2023
Designed: rdi Date: 02.05.2023
Plot date 07.12.2023
Page: 1/1
Scale 1:2 — A3

France
Martin Engineering SARL
50, Avenue d'Alsace, 68025 Colmar Cedex, France
Tel +33 3 89 20 63 24; Fax +33 3 89 20 43 79
info@martin-eng.fr; www.martin-eng.fr

Germany
Martin Engineering GmbH
In der Rehbach 14, 65396 Walluf, Germany
Tel. +49 6123 9782-0; Fax +49 6123 7553-3
info@martin-eng.de; www.martin-eng.de

Italy
Martin Engineering Italy Srl
Via Buonarroti, 43/A, 20064 Gorgonzola (MI), Italy
Tel +39 02 9538 3851; Fax +39 02 9538 3815
info@martin-eng.it; www.martin-eng.it

Russia
OOO Martin Engineering
Bolshaya Kalitnikovskaya str, 42, office 508, Municipal district Tagansky, Moscow, 109029 Russia
Tel +7 495 181 33 43; Fax +7 499 720 62 12
info@martin-eng.ru; www.martin-eng.ru

Spain
Martin Engineering Spain
c/Balmes 297 3° 1ª b 08006 Barcelona, Spain
Tel. +34 876 245 114
info@martin-eng.es; www.martin-eng.es

Turkey
Martin Engineering Türkiye
Yukarı Dudullu İmes Sanayi Sitesi, B Blok 205 Sokak No.6
34775 Ümraniye Istanbul, Turkey
Tel +90 216 499 34 91
info@martin-eng.com.tr; www.martin-eng.com.tr

United Kingdom
Martin Engineering Ltd.
Unit 33, The Tangent Business Hub, Weighbridge Road,
Shirebrook, NG20 8RX, United Kingdom
Tel +44 115 946 4746
info@martin-eng.co.uk; www.martin-eng.co.uk