B-S35224

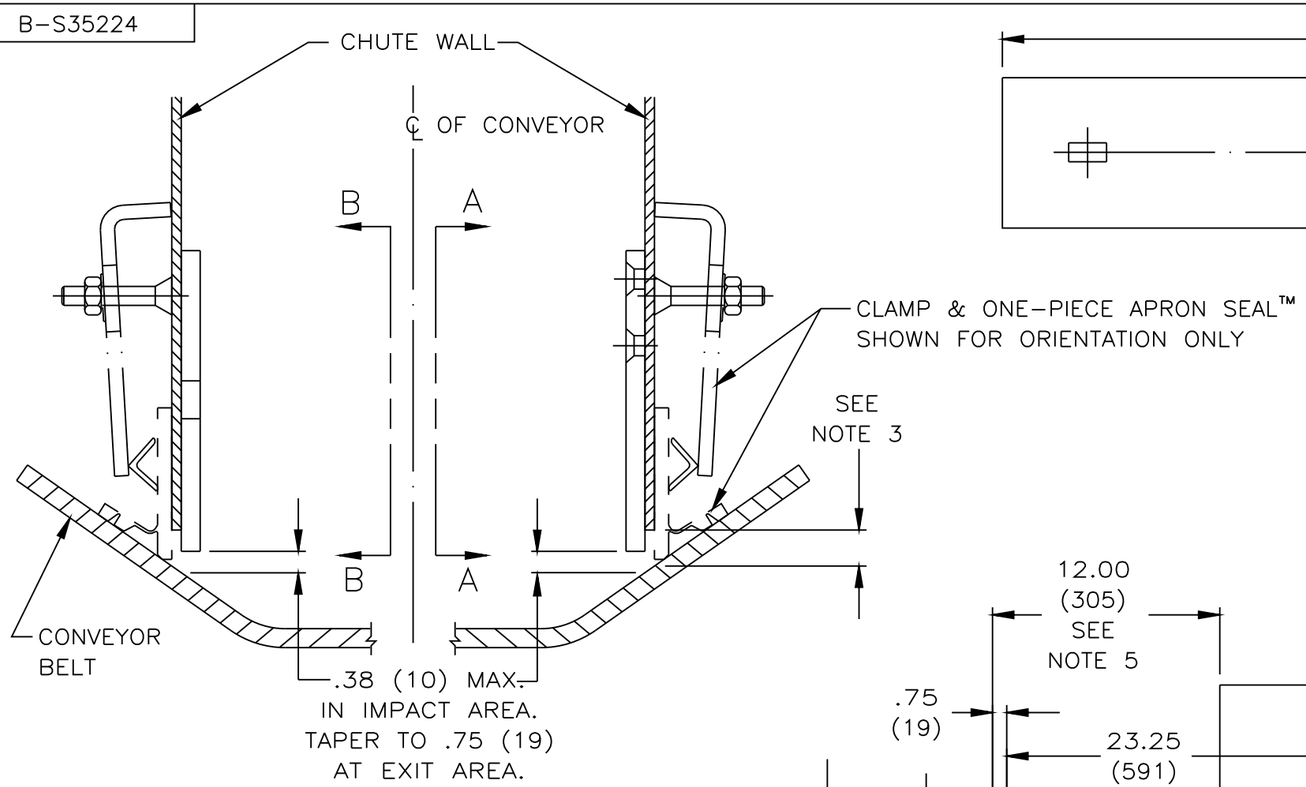

DETAIL FOR 35° BELTS

SCALE: 1/4
THESE DIMENSIONS APPLY
TO ALL BELT TROUGHING ANGLES

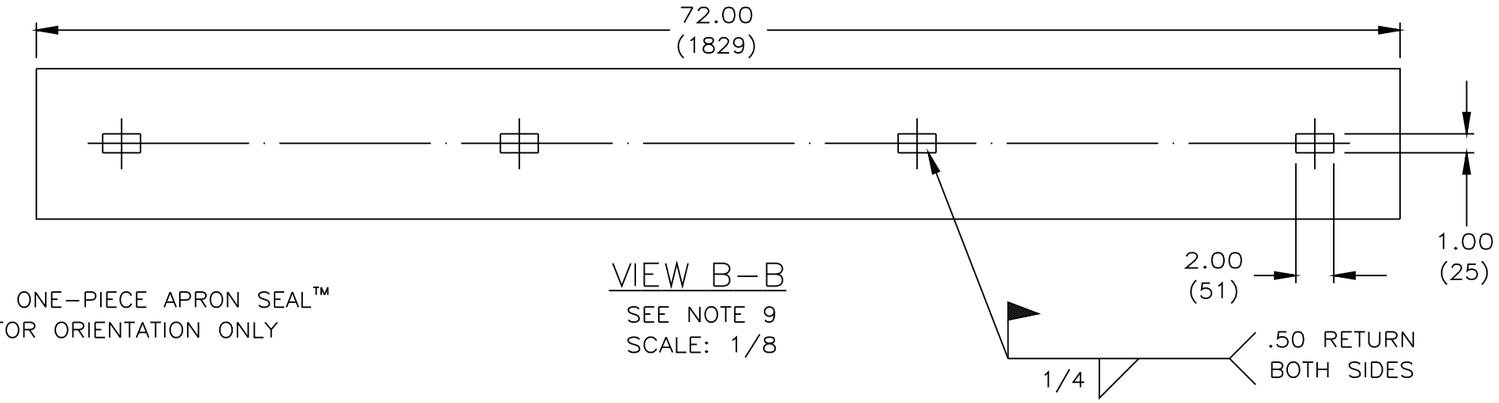

VIEW B-B

SEE NOTE 9
SCALE: 1/8

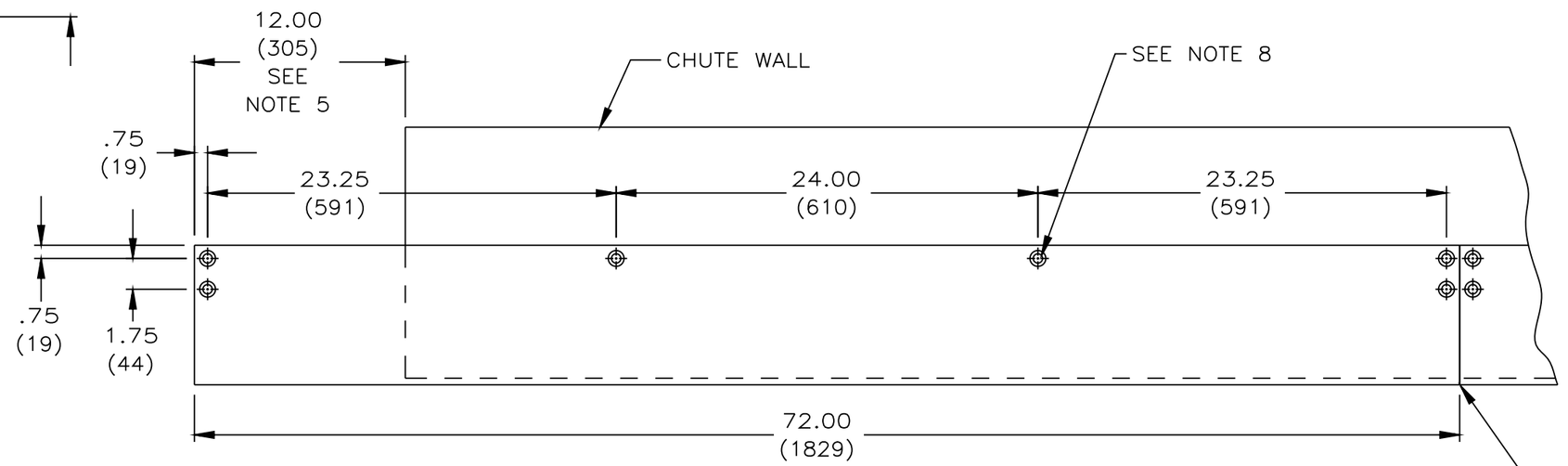

VIEW A-A

SCALE: 1/8

NOTES:

1) ALL DIMENSIONS ARE GIVEN IN INCHES (MM).
2) ALL DIMENSIONS ARE FOR REFERENCE ONLY.
3) MARTIN ENGINEERING RECOMMENDS CHUTE WALL TO BE WITHIN .75 (19) OF BELT.
4) DURT TAMER™ STRAIGHT WEARLINERS ARE USED TO PREVENT THE MAIN LOAD FROM CONTACTING THE SKIRTING.
5) WHERE CONDITIONS PERMIT, DURT TAMER™ STRAIGHT WEARLINER SHOULD BEGIN AT LEAST 12.00 (305) PRIOR TO INLET SIDE OF TRANSFER CHUTE WALL.
6) FOR INSTALLATIONS WITH UNUSUAL OR SEVERE CONDITIONS, CONTACT MARTIN ENGINEERING.
7) WHEN BUTTING ENDS OF WEARLINERS TOGETHER, IT IS IMPORTANT THAT BOTTOM EDGES ARE FLUSH.
8) WEARLINERS SHOULD BE TACK WELDED ACROSS TOP EDGE AFTER BOLTING. MOUNTING HARDWARE INCLUDED.
9) WEARLINERS WITH SLOTS (OPTIONAL) MAY BE WELDED TO CHUTE WALL.
10) THIS DRAWING IS NOT A SUBSTITUTE FOR THE OPERATOR'S MANUAL. THIS DRAWING IS FOR REFERENCE ONLY.

NO.	DESCRIPTION	ECN	DATE	BY

REVISION

© Copyright 1997 Martin Engineering. All rights reserved. Covered by U.S. and foreign patents pending and issued. ® and TM indicate trademarks of Martin Engineering.

MARTIN ENGINEERING
NEPONSET
ILLINOIS
USA

DRAWN MJT
DATE 09/30/97

TITLE
INSTALLATION DRAWING
FOR DURT TAMER™
STRAIGHT WEARLINER

CHECKED
ENG. KJC
DATE 09/30/97
APPROVED JAS
DATE 09/30/97

DRAWING NUMBER
B-S35224
L:\SAL\S35224

SCALE AS NOTED