B-S35176

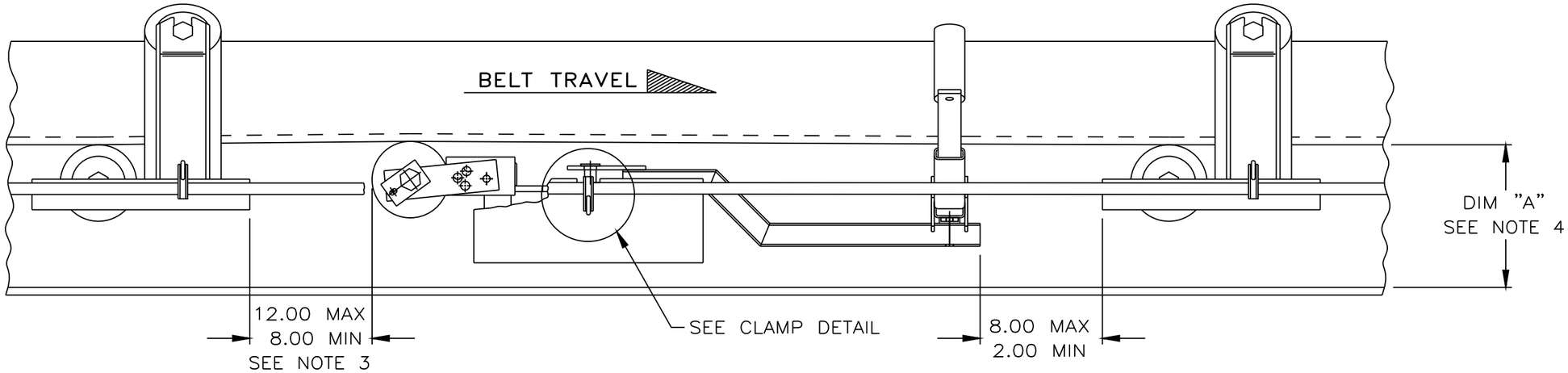


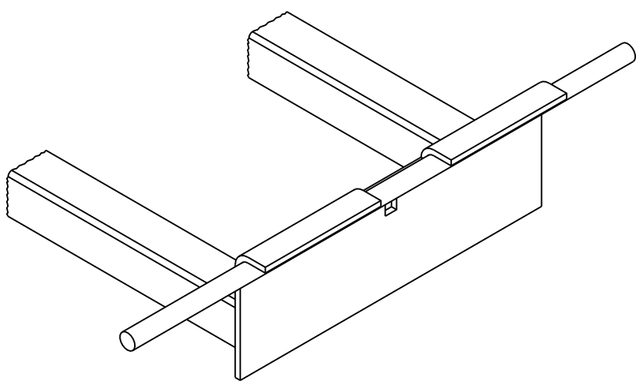

CABLE HANGING DETAIL
SCALE 3/16=1

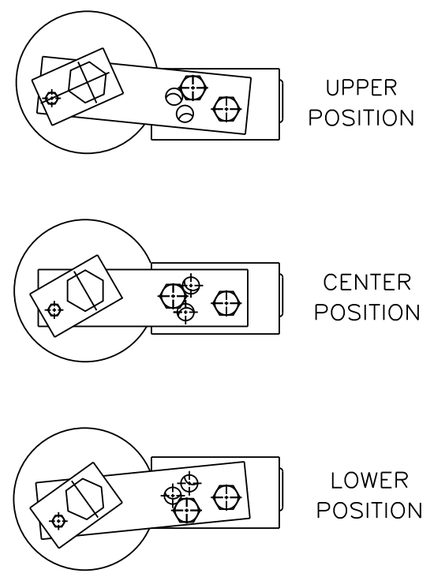


ROLL ADJUSTMENT DETIAL
SCALE 3/16=1

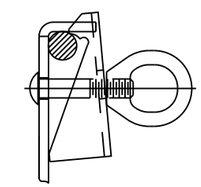

CABLE CLAMP DETAIL
SCALE 1/4=1

NOTES:

1) ALL DIMENSIONS ARE GIVEN IN INCHES (MM).
2) ALL DIMENSIONS ARE FOR REFERENCE ONLY.
3) FOR BEST RESULTS, POSITION THE MARTIN® TRACKER SO A CONVEYOR DROP HANGER OR ANCHOR SUPPORT IS WITHIN THIS DIMENSION.
4) DIMENSION "A" MUST BE 8.50 (216) OR GREATER TO PROVIDE ENOUGH CLEARANCE BETWEEN THE CARRYING AND RETURN SIDES OF THE BELT FOR THE MARTIN® TRACKER TO OPERATE FREELY.
5) SET ROLL ADJUSTMENT IN THE CENTER POSITION FOR INITIAL INSTALLATION. REPOSITIONING MAY BE NECESSARY AFTER INSTALLATION TO OBTAIN PROPER BELT CONTACT.

| NO. | DESCRIPTION | ECN | DATE | BY |
|---|---|---|---|---|
| | | | | |
| | | | | |

REVISION

© Copyright 1997 Martin Engineering. All rights reserved. Covered by U.S. and foreign patents pending and issued. ® and TM indicate trademarks of Martin Engineering.

MARTIN ENGINEERING
NEPONSET
ILLINOIS
USA

TITLE
MARTIN TRACKER ® FOR CABLE HUNG BELTS INSTALLATION DRAWING

DRAWN J.A.P.
DATE 07/17/97
CHECKED
ENG. KJG
DATE 07/31/97
APPROVED JRB
DATE 07/31/97
SCALE 1/8=1

SALES DRAWING
MD0331
L:\SAL\S35176
B-S35176